LIBRARY
OF THE
Theological Seminary.
PRINCETON, N. J.
PER AS 472 .A84 v.20
Journal of the Asiatic
Society of Bengal

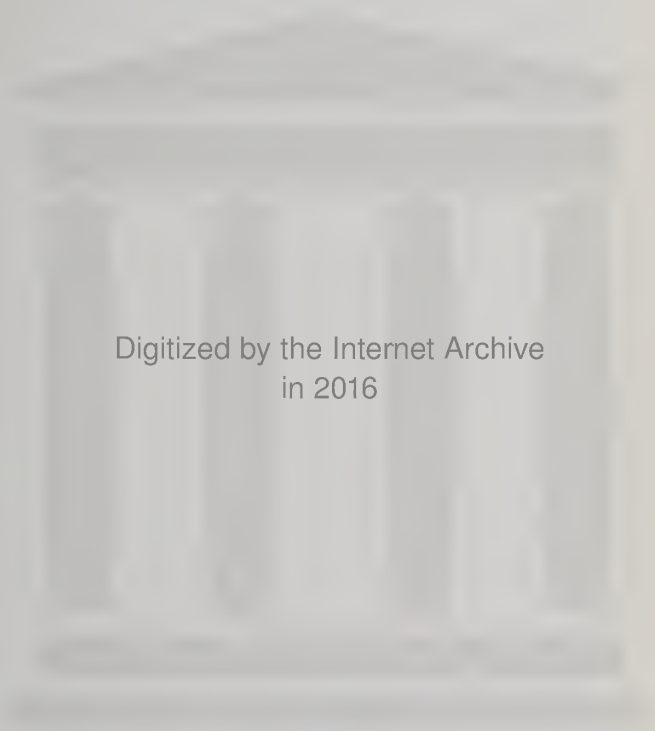

Digitized by the Internet Archive
in 2016

https://archive.org/details/journalofasiatic2047asia

JOURNAL

OF THE

ASIATIC SOCIETY OF BENGAL,

EDITED BY

THE SECRETARY.

VOL. XX.

Nos. I. to VII.—1851.

"It will flourish, if naturalists, chemists, antiquaries, philologers, and men of science, in different parts of *Asia* will commit their observations to writing, and send them to the Asiatic Society at Calcutta It will languish if such communications shall be long intermitted; and it will die away if they shall entirely cease."—Sir Wm. Jones.

CALCUTTA:

PRINTED BY J. THOMAS, BAPTIST MISSION PRESS.

1852.

JOURNAL

OF THE

ASIATIC SOCIETY.

No. IV.—1851.

Brief notice of the Sil Hâko or stone bridge in Zillah Kámrúp.—By Major S. T. Hannay. *Communicated through Major* F. Jenkins, *Agent to the Governor General, by Captain* E. T. Dalton, *B. N. I. Assistant Commissioner, Assam.*

This bridge, a remnant of ancient times in Kámrúp, is situated about eight miles N. W. of Northern Gowhátty, on the high alley which, no doubt, formed at one time the principal line of land communication with ancient Gowhátty (Prágjyotisha) and Western Kámrúp, and is built across what may have been a former bed of the Bor Naddí, or at one particular season, a branch of the Brahmaputra; appearances now indicating a well-defined watercourse, through which, judging from marks at the bridge, a considerable body of water must pass in the rains, and at that season from native accounts, the waters of the Brahmaputra still find access to it.

The structure is of solid masonry, built without lime or mortar, of the same massive and enduring material (gneiss and granite) found in the neighbouring hills, and which appears to have been used so largely in the construction of the more ancient temples of central and lower Assam. There are no arches, the superstructure being a platform with a slight curve 140 feet long and 8 ft. in breadth, composed of slabs of stone, six feet nine inches long and ten inches thick, numbering five in the whole breadth, resting on an understructure of sixteen pillars, three in a row, equally divided by three large solid buttresses; with a half buttress projecting from a circular mass of masonry forming the abutments at each end of the road, there being in the whole length 21 passages for the water.

The buttresses are all after the same model, those in the centre measuring (at a level with the water and as near as I could ascertain one layer from the foundation) about sixteen feet ten inches in breadth by eight feet ten inches in thickness, tapering in regular layers of masonry with rounded corners to 3 feet thick and 8 feet broad at top; on which is laid a slab of the same breadth supporting those of the platform. The pillars spring from a base of very massive material and measure at a line with the water twelve feet four inches in breadth by 4 feet 4 inches in thickness, gradually diminishing in receding layers to the height of 3 feet 4 inches, from which rises the abasement of each pillar, the first stone being a squared block of $2\frac{1}{2}$ feet, upon which rests another block 2 feet square; the average thickness of the shaft; the remaining portion of which is octagonal shaped. The two first octagonal blocks have a large slab across them, and upon this rise two, three and four blocks according to their size and the difference in height towards the centre of the bridge, the upper one being formed into a round capital, and over the whole is placed a slab similar to that which covers the buttresses. The height at the centre of the bridge by measurement with a line to the level of the water is nearly 20 feet, there being a difference of 2 feet between this measurement and that of the spring of the platform at each end.

From the great care taken in the chiselling, squaring and fitting up of the component parts of the whole, as well as the great size and weight, the work is one of great strength and solidity. And this accounts for the good state of preservation in which we find it in the present day: for with the exception of the masonry of the abutments at each end, in which large trees have taken root (one of them a tamarind tree the stem 16 feet in circumference) and displaced the stones, the rest of the structure may be said to be entire. From a fracture in one of the pillars, I observed that the upper blocks were kept in their places, by means of iron pins, firmly wedged into the lower ones; four apparently through the centre and one on each side of the square of the shaft, and, although not visible, other portions of the work may be iron clamped; the slabs of the platform were marked with clamping holes, and on the edge of the outside slabs are three square holes (3 inches square) which were no doubt intended for the wooden supports of a balustrade. Several freize-carved blocks are also lying near the end abutments,

from which I imagine the entrance of each may have been ornamented, or there may have been gateways.

The design and style of architecture of this bridge, evidently belongs to a remote period in the annals of Kámrúp, and in its original structure at least must be co-eval with the erection of the ancient Brahminical temples, the remains of which are found so widely scattered throughout the length and breadth of Assam; the works of its former Brahminical kings, a race long ago extinct in the annals of modern Hinduism, and of whom the present race in Assam know nothing.

That Kámrúp had for a long period a dynasty of Brahminical kings there can be little doubt, on the authority of both Buchanan and the Chinese pilgrim Hwan Tshang who visited India in A. D. 629, 642. The former quoting the Yogini Tantra, a work which treats of ancient Assam, states under date that the worship of the Lingas commenced in the 19th year of *Saka*, that at an indefinite period afterwards it was further extended by a Brahman of the Korotoya river who became king, by name Nogo Songkar and whose dynasty continued probably until the time of Hwan Tshang's visit as he mentions the name of the then reigning king a Brahman (Vide Captain Cunningham's Itinerary of the Chinese Pilgrim Hwan Tshang in the J. A. S. B. for July, 1848, page 40), and that Buddism according to the doctrines of *Sákya* or Guadama had not extended into Kámrúp, the people of which were heretics, and possessed the doctrines of the Sutarus of the Vedas, by which it is presumed he means Brahmanism or more likely the worship of Iswara as the Supreme Lord, which in these remote times was adhered to by Brahmans, and who had not adopted the doctrines of Gaudama. This Brahminical dynasty may have continued for a century longer, when the country was overrun, and became disorganised by the invasion of Lallitáditya king of Cashmere, and the ancient religion perhaps never got re-established, and about the year 840 according to the tradition of the Cássorís (the Racchas of the valley) that tribe assumed the government of the country, and held it until the 10th or 11th century, when they were drawn out by an invasion of a power from India, bringing in its footsteps that modern Brahmanism, which had a century before driven from India the doctrines of *Sákya* Muni.

The accounts by Mohammedan writers of the earliest conquests of

Kámrúp by the subordinates of the Moslem kings, appear to be mixed up with so much of the fabulous (Vide the late Major Fisher's accouut of Cachar, Sylhet, &c. No. 104, J. A. S. B.), that it is quite impossible to place much reliance on them as historical records ; if however, we could suppose that the expedition of 1205 to 6 as above quoted, came in sight of the Brahmaputra at Rángámátí crossed the Monás and marched through Northern Kámrúp, the possession of which would oblige the Rájá to submit, it is not improbable but this is the stone bridge over which Bactyár Khilji aud his Tartar cavalry passed, previous to entering the outworks of the ancient city of Gowhatty (or Prágjyotisha), the bridge being but a short distance from the line of hills bounding Gowhatty on the North N. W. and West, on which are still visible its line of defences extendiug for many miles on each side from the N. W. gate of entrance or pass through the hills.

The Mohammedan general is also said to have beeu obliged to retreat from an advanced position (perhaps Chárdoár) hearing that the Rájá of Kámrúp had dismantled the stone bridge on his rear ; now it is quite evident from the marks on the stones of the platform, that they had been taken off and replaced somewhat irregularly.

Note. The king in whose time the worship of the Linga commenced was styled Devyswar, aud by the Bráhman who has compiled the Yogini Tantra, a modern work pretended to be the prophecies of the great Siva himself of events to come to pass in Kámrúp, he is said to have been of the Sudra race, but it is likely he may have been of the ancient race of the Devas and Duttas who reigned supreme in ancient "Mithila" of which kingdom Kámarúpa was a dependency if not a portion, and his proper title *Devasa* as written in the old character of the inscription on certain coins found near Jyonpur, translations of which were published in No. 84, Vol. 7, Plate 60, J. B. S. ; and this might account also for the *Debasa* or Devasa of the maps of India of the same century, the position appearing to correspond with our modern Kámrúp and Cháridoár. Kámarúpa at that period included the hills as far as Kaonjegiri now under the Deb Rájá or Bootan.

Pl. VI

- THE BEHAR MICA MINES -

A sketch of the Behar Mica Mines. By Capt. W. S. Sherwill, *Revenue Surveyor.*

The principal Mica mines of Behar, are situated on the Northern face of the Vindhya hills, where the three districts of Behar, Monghyr and Ramghur meet. The most westerly-situated mine is thirty-seven miles in a south-easterly direction from Gya, and is in the district of Behar; the most easterly mine is about sixty miles distant in zillah Monghyr; the whole of the intermediate sixty miles being more or less productive of the mineral. The average distance from the Ganges of the whole aggregated group of mines is sixty miles.

Those mines only which lie within the boundary of the district of Behar are worked, those within the district of Monghyr, from some unknown reason, are neither worked nor regarded as of any value by the owners of the estates in which they lie.

Rajowlí, a small village, in Pargannáh Jarráh, of Zillah Behar, is the great mart for the mineral, and the spot whence it is dispersed to all the great markets on the Ganges: this village is situated on the left bank of the Dhunarjeh Nalláh, which stream, together with the Tillyá Nalláh, unite four miles south of Rajowlí, flow from the southern hills in deeply wooded valleys, and completely intersect the mines. The beds of these streams, the roads through the passes, and valleys, and indeed the whole surface of the country around the mica formation, sparkles with the bright mineral.

Leaving Rajowlí and proceeding four miles in an easterly direction, a deep wooded valley is entered, situated amongst and surrounded by quartz hills; through this valley, in the rainy season, a mountain torrent descends with great violence bringing with it great quantities of mica. After ascending the course of the torrent for about a mile, the valley terminates in an amphitheatre of low jungle-covered hills; the soil forming the superficial covering of the country is composed of a harsh dry gravel, composed of quartz, schorlaceous schist, detached and silvery mica; through which soil are seen protruding huge, naked masses of quartz and gneiss, the latter both plain and garnetiferous. In the beds of the torrents, bushels of minute garnets may be gathered

but from their very insignificant proportions, they are quite useless. A very beautiful schorlaceous schist, consistiug of crystals of schorl of a delicate fineness, embedded in mica, as well as larger crystals of raven black schorl, varying in size from that of a finger to that of a man's arm, embedded in a bright glassy quartz and affording by the contrast of the two minerals a very beautiful object, are found in great abundance; such is the nature of the minerals in the immediate neighbourhood of the mines, which are always opened in low detached hills. The mica appears in amorphous masses varying from a few inches square, to four feet in length, embedded in an incoherent soil composed of schorl and comminuted silvery mica, the whole mass filling up extensive interstices between large and widely separated quartz rocks.

The mode of opening a mine is as follows: a small and convenient hill having been chosen as the spot for commenciug operations upon, a party of the wild hill tribes, named Bandáthís, the members of which party have freely propitiated the local tutelary god or goddess, both by sacrifice and by getting very drunk, ascend to the top of the hill and commence sinking a series of pits, the whole way down the profile of the hill, about three feet in diameter each, and a few feet apart. These pits are not continued vertically downwards, but iu a zig-zag shape, but nevertheless not so much out of the vertical proper, as that a basket containing the mineral cannot be hauled up from the bottom of the pit to the top; the zig-zag shape of the shaft beiug formed by sinking the shaft, first incliuing to the left a few feet and then to the right a few feet, the head of each cut or notch forming a landing-place or step, and thus the necessity of ladders is obviated; the projecting of salient angles of the notches forming a perfect flight of steps from the top to the bottom of the pits, which seldom reaches to a greater depth than forty feet, when darkness interfering with the workman's progress, the pit is forsaken and another commenced upon a few feet further down the hill. A slight frame-work of faggots cut from the neighbouring trees, is placed over the mouth of each pit, upon which a man sits, waiting till the signal from below is given to haul up the basket containing the mica and rubbish, which has been dug from the sides of the pit by the aid of a rude pick. On arrival at the surface the good and bad materials are separated, the earth and

rubbish are shot down the precipitous side of the hill; the good mica which arrives at the surface of the pit in ragged masses about one foot six inches in length, six inches broad and three inches in thickness, after having its ragged edges trimmed off with a reaping-hook-looking instrument, is placed by itself in a heap, and the bad or refuse, that is the softer kind, is also placed aside in a heap by itself.

The mica reaches the surface in three different states, viz. the good, hard and seviceable mineral; the soft, wet and flimsy mineral; and the chipped and powdered mineral.

The tests as to whether the mica is good for any thing, or whether as the natives say "*it is alive*" are its firmness, specific gravity, and the power of reflecting the countenance free of contortions; the latter test I imagine showing the perfect parallelism of its individual plates, and consequent likelihood to split well; the heavier the mineral and the more perfect the reflection, the more valuable is the mineral considered; all the plates not standing the necessary test, are of a soft and flimsy nature without any of the brilliant sparkle of the better sort, the natives call this the "*dead mica*," and it appears to be in a state of decay.

The plates of the superior kind are used in all the large gangetic cities and towns, by the native draftsmen, whose beautiful productions in body colors, must be familiar to most people; by the lamp and toy makers; by the Mohammedans for ornamenting their Táziáhs; as well as for ornamenting umbrellas, boats, and for making artificial flowers.

The second and third kinds are pounded and used for ornamenting toys, pottery, the inside of houses, for sprinkling over clothes and turbans at feasts, the sparkle from which by torch light resembles diamonds; but the great consumption of the inferior mineral takes place during the Hooli festival, during which period the "ábeer" or pounded mica mixed with the flour of the small grain, "*Kodo*" and colored with some red coloring matter, is freely sprinkled over the maddened and intoxicated votaries of those bacchanalian orgies.

The mines are worked by Maháj ans or native merchants, who reside at Patna and depute agents to the spot to superintend the mining. The excavators or miners are Bandáthís or inhabitants of the hills, a race allied to the Kols, Bheels and Sonthals; they are a wild-looking

set of demi-savages, slightly clad, the forepart of their head shaved, the rest of their hair standing up in wild curls; they have the high cheek bones, thick lips and small eyes of the Vindhyan races; they are also a hard-working and merry race. The miners receive as monthly wages one maund (80 lbs.) of rice, and a piece of cloth, the whole valued at two rupees.

The mines are worked during the months of January, February and March only; for during the hot months or from the latter end of March or June the great heat dries up all the water for many miles around the mines, and during the rainy season the pits fill with water; and subsequent to the rains the unhealthiness of the dense miasmatic jungles in the neighbourhood, prevent the work commencing before January.

During the three working months, about four hundred mauuds or fourteen tons of mica, yielding upon calculation 20,000,000 transparent plates of mica, each plate being about nine inches square, are conveyed away to Patna upon pad bullocks, the whole being valued at 4,000 Rs. (£400.) To obtain larger plates than are generally exported, does not seem to be an object with the agents, who by their constantly urging the miners to wrench out the mica from its matrix, whether in large or small pieces cause about three times the amount of mica actually carried away to be destroyed in the mines. The head Bandhâti assured me that were time allowed him, he could produce plates of almost any size.

The largest plates are dug from the Deilwar mine where the miners have hit upon a seam of mica, running along the base of one of the small hillocks; it is thus worked in the open air only a few feet from the level of the country; this seam however will be soon lost as the half wild miners have no idea of propping the roof of a mine which must very soon fall in by its own weight.

Examination and Analysis of the Shalka Meteorite *(Zillah West Burdwan). By* Henry Piddington, *Curator Museum of Economic Geology.*

The following details are a proper introduction to an account of this valuable addition to our Museum.

It was about the 15th January that Major Hannyngton, Agent for the Governor-General S. W. Frontier, called at the Museum with a very minute specimen of an ash-coloured mineral, which had all the appearance of a fragment of a Meteorite, and which I pronounced at a venture to be one, and he told me it was so, referring to Dr. Check of Bancoorah for further information.

To Dr. Cheek, who has frequently obliged me with storm Reports, I wrote by the same evening's dawk, requesting the favor of a larger piece of the stone with the crust; and we shortly had a fine large specimen sent by dawk, which fully shewed without the necessity of an analysis that it was a true Meteorite. Mr. Colvin was so good as to oblige me with a private letter to Mr. Mactier, and our late Secretary Capt. Hayes also wrote officially to that gentleman, to whom I took the liberty also of forwarding, with Mr. Colvin's and the Secretary's letters, a series of 22 queries for the examination of witnesses to the fall of the stone, embracing most of the points which, on so hurried a call, occurred to me as important, or likely to suggest others which might be so; for there was, I knew, no time to be lost; as the natives invariably carry off Meteorites for charms, objects of worship, &c.

To Mr. Mactier the Society are greatly indebted, for he took the pains to go personally to Bishenpore, a distance of ten miles, and the results of the replies obtained will be seen following the different questions framed by him upon my queries and forwarded to the Society in Bengalee, and in the letter from Mr. Mactier as printed below.

Examination of witnesses before Mr. Mactier. *Translated by Babu* Rajendra Lal Mitter, *Librarian Asiatic Society.*

On the 24th of January, 1851. Bengali 1257, 12th Magh.

Rambira, son of Bolai of the Rajput caste; inhabitant of Sáluka, Ætat about 35 years, profession, formerly a peon of the Purulia collec-

torate, and *Bhuban* Bágdi, son of Kugan, of the Bagdi caste ; inhabitant of Pechnápur, Ætat about 60 years, by profession a Chowkidar.

Question.—State what you know of the stone which fell from the sky?

Between the 10th and 20th of Agraháyana,* one night when about a fourth of the night had yet to elapse, I heard a rolling noise *(gur gur)* which awoke me from my sleep; but on my coming out and enquiring about the cause of it, I could ascertain nothing. The following morning about an hour and half after day break, proceeding to superintend the reaping of my paddy, I found in the paddy field of Náráyana Pála, to the South, and about 180 feet beyond the village of Sáluká, (Shalka,) that a stone, about one cubit wide, had fallen and broken to pieces. Those who came from a distance to see the stone carried away fragments of it. It was first seen by Bhuban Bágdi, Chowkidar.

Bhuban Bágdi. I serve as a Chowkidar of the village of Sáluká. Between the 10th and 15th Agraháyana of the current year, one night when two and half quarters (prahara) of it had passed when a quarter (?) of it had yet to elapse (i. e. at $1\frac{1}{2}$ A. M.) a stone fell crashing on the earth, with a crackling noise (*char-char pur-pur*) about 160 to 240 cubits to the south of the village. Not wishing to go during the night I proceeded the next morning to the place, and found that a pit had been formed there, and fragments of the stone were lying about it; the stone was covered with earth, i. e. with loose earth.

I called the people in the field and told them "Look at this, it has not been dug by bears nor men." The paddy-reapers, seeing the fragments and the large stone covered with earth, observed that the stone must have fallen when the sound was heard the night preceding, and went their way, some of them taking away the fragments, and stating this must be a Debta, do not (MS. uncertain).

Q. to *Bhubun.*—When you heard the crackling noise, did you see any flame or lightning, and was any wind blowing at the time?

A.—The sky was illuminated with lightning.

Q. No. (10).—to *Rambir.*—Did you observe any light at the time?

A.—*Rambir.* I observed none.

Q. to *Bhuban.*—How far were you from the pit when the stone fell?

A.—*Bhuban.*—Between 2 and 3 *rosis* (180 to 240 cubits). I ran towards the huts of the Mugs.

* 25th Nov. to 5th Dec.: This is a purely Indian notion of a date.

Q.—Rambir.—Was there only one stone or a number of stones ?

A.—Rambir.—One stone fell and broke into many pieces.

Q. (8).*—Were stars visible at the time when the stone fell ? and what was the appearance of the sky ?

A.—Rambir.—The sky appeared as usual and the stars were visible.

A.—Bhuban.—The sky was as usual.

Q.—(9).—What sort of noise did you hear ?

A.—Rambir.—Like the rolling of clouds.

A. Bhuban.—A rolling noise (*gur-gur*).

Q.—(12).—When you saw the stone first, was it hot or cold ?

A.—Rambir.—Cold.

A.—Bhuban.—It was not hot, it was cold.

Q. (13).—Did the stone burn the grass or anything else about the place where it fell ? or dry up the ground about it ?

A.—Rambir.—Neither grass or any thing else was burnt, nor did the ground dry up.

Q. (15).—Was there any smell to the stone when you first saw it ?

A.—R. and B.—None.

Q. (16).—How was the stone lying at the time when you first saw it,—lying flat ? or in a slanting position ?

A.—Rambir.—In a slanting position ; when the ground around was dug the stone appeared in a slanting position. It appeared as if it fell from the South (witness here described the angle made with the ground to be about 45°).

A.—Bhuban.—It was slanting, I think it came from the South.

Q. (19)—Has the colour of the stone changed, since you first saw it ?

A.—R. and B.—As it was then so is it now. No change of colour has taken place.

Q. (20).—What was the state of the weather on or before the day the stone fell ?

A.—Rambir.—As usual.

A.—Bhuban.—As now.

Q. (21).—Did you ever hear of any stone of the kind having fallen before ?

A.—Rambir.—Nothing of the kind has been heard.

A.—Bhuban.—I have heard nothing.

* These numbers refer to those in my draft of queries. H. P.

Q. (22).—From which quarter was the wind blowing at the time?

A.—Rambir.—I took no notice of it.

A.—Bhuban.—There was no remarkable wind at the time.

Q. to *Rambir.*—When the Joint Magistrate of Gurbeta ordered to dig out the stone, how low did you dig?

Rambir.—I dug two cubits, or one cubit and a half.

To *Bhuban.*—How deep was the stone dug for?

Bhuban.—About two cubits.

Q.—When you first saw the stone, how high was it from the ground?

Rambir.—On a level with the ground.

Bhuban.—It had entered about a cubit and a half below the ground; it was covered with loose earth.

Q.—When the stone was dug out, was it found in one entire piece? or in several pieces?

A.—Rambir.—There were large and small pieces, but I was not present at the time; I went away to my work.

A.—Bhuban. One entire piece was found.

Q.—to *Bhuban.* Did any body else beside you see the stone fall?

A.—No body else was present: none saw it.

Q.—When you saw the lightning was there any light on the ground?

A.—Bhuban. None.

Q.—When the lightning appeared, why did you run away?

A.—Bhuban. The rolling noise frightened me, and dreading lest it should fall on me, I ran towards the village of Saluka.

Q.—How did the lightning appear?

A.—As usual.

Q.—What was the weight of the stone, together with the fragments?

A.—The small fragments remained behind; the large mass was taken away by a Burkandaj from Bishenpur. I cannot say its weight.

Q.—You have already said that there was no cloud, but only lightning. Did you examine this carefully?

A.—Yes, I examined carefully and found no cloud.

The following replies are in answer to Nos. 3, 4, 5 and 7 of my queries, and are given in English by Mr. Mactier.

3. Where did it fall? describe the spot exactly.

In the middle of paddy fields surrounded by cultivation on all sides, the ground for some distance sloping down from N. to S.

4. What kind of ground did it fall upon (send a good specimen of the soil) and describe it particularly as to rocks, or stones or alluvial or arable land?

A specimen accompanies—no rocks or stones near; in the middle of *paddy khets.**

5. How far from any water?

30 yards from a small tank (about 4 cottahs in extent.)

7. What became of the other pieces? (If any small ones can be found near the spot like it, or with a black crust, send them.)

Carried off by persons from all parts of the country who came to see the stone.

The following official letter from Mr. Mactier to the Secretary of the Society gives a summary of this evidence, and his own account of the locality and impressions on the subject.

To the Secretary of the Asiatic Society of Bengal.

From the Officiating Joint Magistrate of Zillah Bancoorah.

Dated Bancoorah, 28th Jany. 1851.

Sir,—Under orders from his Honor the Deputy Governor of Bengal, I have the honor to forward part of a meteoric stone which fell early in the morning of the 30th November, 1850, corresponding with 16th Aghran 1257, B. S.

2. I have the honor to forward two depositions given by persons residing near the spot, one, the chowkeedar, being the only person who was out of doors when the stone fell, and at the same time to add the result of my own enquiries among the inhabitants of the neighbouring villages and a description of the locality.

3. The hole from which the stone now sent was dug, is situated about eighty yards due south of the village of Shalká;—immediately surrounding the spot are paddy fields and the spot itself is on the northern edge of a small paddy *khet* about 4 cottahs in extent. The village of Shalká contains about 20 houses and huts; 3 or 4 moderately sized trees grow close to it; beyond the village the paddy cultivation, with occasional tanks, stretches to the N. for about a mile and $\frac{1}{2}$ till it is terminated by low jungle. About 30 yards to the north-east of the spot is a small tank (Beng-dhobá) about 4 cottahs in extent

* *Anglice*, Rice fields.

at the S. W. corner of which is a tamarind tree. To the east is paddy cultivation terminated by the houses of Bhorah-Dharmpúr about $\frac{3}{4}$ of a mile off. From east to S. W. is a large cultivated (rice) plain, bounded by the villages on the immediate bank of the Dalkisher river, which is distant from the spot 4 miles in direct line. About $\frac{1}{4}$ of a mile to the S. W. is a tank, beyond which is low jungle extending W. b. N., and due W. distant 250 yards is the jungle abovementioned, and to the N. of W. distant 100 yards, is another small tank, between which and Shalká are paddy lands. The ground slopes downward considerably from N. to S. A specimen of the soil in which the stone fell is sent, the stone being embedded in it. At the time of the fall it (the soil) was in the state of mud. I observed that the banks of tanks near the spot were composed of Kanker. I conclude therefore that the stratum immediately under the soil in cultivation is Kanker.

4. On the night on which the stone fell as well as for some days previous and subsequent thereto, there was nothing to be remarked in the state of the weather, the temperature was seasonable, very little wind and the sky clear, no clouds being visible.

5. About 3 hours before sunrise a clap of thunder was heard, accompanied (Vide the Chowkeedar's evidence) by a flash of lightning. Statements were at variance as to the nature of this noise, some persons saying, it in no ways differed from ordinary thunder, others, that they recognised with it, a whirling noise (*gur-gur shabda. Beng.*) The noise does not appear to have been extraordinarily loud, as persons in the village of Bhorá about $\frac{3}{4}$ mile off were not awakened by it.

6. The ryots on going to their fields in the morning, observed the earth ploughed up, they at first thought it had been made by a bear, or by some of the low castes in digging out grain from the rat-holes,* but on looking further they saw fragments of the stone scattered on all sides within a radius of about 20 feet, and the stone itself embedded in the soil, but with no part projecting therefrom. The color was then what it now is, it was cold to the touch and had no smell. The Chowkeedar it is to be observed, states that after the flash he saw nothing burning on the ground. The stubble and grass was not scorched nor the ground dried up. As with the specimen now sent is the earth in which it was embedded, the Society will be enabled to test these statements.

* A common practice in India.

7. All agreed in stating the stone to have come from the south, but the angle it made with the earth is variously stated, from 45° to 80°. This is easily accounted for, as no portion projected out of the earth. The Talookdar of the place, by name Gopal Mundle, the most intelligent of the observers had a tent peg driven in so as to represent the course of the stone in the earth (he having been present when the stone was dug out) from which, supposing the course of the stone not to have been altered after first contact with the earth, the angle made with the earth would be nearly 80°.

8. The greater portion of the stone having been carried off I was unable to obtain exact information as to its size; the portion now sent, and it is that furthest embedded, was dug 3 feet from the surface, and as pieces of the stone were dug out continuously from the surface, the stone itself being, though embedded, shattered, it must have been apparently upwards of 3 feet long.

9. No occurrence of the sort has ever happened in this part of the country.

10. I regret I have been unable to send more numerous depositions. I was pressed for time, and there is always great delay in such cases in distinguishing hearsay from direct evidence; numerous persons presented themselves very willing to tell all they knew, but after a little questioning it appeared their knowledge was obtained from others. I took therefore the depositions of those apparently best informed. Any other particulars which may be required I shall be happy to do my best to obtain for the Society.

11. I may mention that the people on the spot said, that on the same night a stone had fallen at or near the village of Kúchat in the Burdwan district.

(Signed) T. W. Mactier,
Offg. Joint Magistrate.

There are some points of resemblance between the circumstances attending the fall of this meteor, and that of the Cold Bokkevelde stone at the Cape, as described in the 82nd and 83rd vols. of the Philosophical Transactions by Sir John Herschell's correspondents, and which are also common to the few accounts we have of the falling of these stones by persons near the spot. We find that at Shalká as at the Cape, the air was calm and the sky clear, at the time of the fall of the

stone; there was also a rolling noise,* sufficiently loud to alarm the witness who heard it though not amounting to the explosion which accompanied the Cape meteor.† It will subsequently be seen that, though the witnesses give us no evidence to that effect, the stone was doubtless hot when it fell. The angle of fall seems to have been between 45° and 80 with the horizon. With regard to the second stone said to have fallen on the same night, I wrote to Mr. Patton, the Civil and Session Judge of Burdwan concerning it, and he has kindly caused every enquiry to be made, but cannot trace any truth in the report. It is not, however, improbable that the natives of the vicinity having carried off the whole of the stone may have leagued together to deny that any fall took place, fancying that they might be brought into some trouble now that the *Hoozoor*‡ was enquiring about it.

So far as to the circumstances attending the acquisition of the Meteorite and the evidence of the facts connected with its fall, I now proceed to describe what we have received, and to remark upon some physical peculiarities, reserving the description of the stone as a mineral for the chemical part of this report.

We have received two large lumps of 2 or 3℔. each, with 2 or 3 ℔s. of smaller pieces and fragments, and perhaps half a pound more firmly embedded in the earth sent with the specimen. This is, of course, all Mr. Mactier could rescue from the natives who, it appears, have carried off the greater part of it, as they always do, for religious, medicinal and superstitious purposes. We were thus not an hour too soon in our

* The imitative Bengalee word is such as would be used to express the loud rolling of heavy hail clouds, or something between distant musketry and low thunder.

† I have not seen it noticed that one of the oldest and best detailed descriptions of the fall of a Meteorite, is found in Virgil; Æneid B. II. l. 692. I copy here the passage, which Virgil probably wrote from some account which was then extant.

"Vix ea fatus erat senior, subitoque fragore
Intonuit lævum, et de cœlo lapsa per umbras
Stella facem ducens multâ cum luce cucurrit.
Illam, summa super labentem culmina tecti,
Cernimus Idæâ claram se condere sylvâ,
Signantemque vias; tum longo limite sulcus
Dat lucem, et latè circum loca sulfure fumant."

‡ *Anglice.* The chief authority.

claim for a share of it. Almost the whole of the pieces which formed any part of the exterior of the Meteorite (as known by the usual black crust) have surfaces more or less curved, shewing that it must have really been as described of very considerable size, though it evidently broke into pieces on reaching the earth.

For, in compliance with my note to query No. 4, Mr. Mactier has most obligingly sent us a large mass of the earth in which the stone embedded itself on its fall, and this is almost as great a curiosity as the stone itself, as will presently be seen.

This mass of earth in its extreme dimensions is about a foot long and a foot broad. It contains two cavities, being the marks of two large curvilinear masses (like great shells) having fallen close to each other; and these are divided by a rough ridge about two inches across at its narrowest part. At the side of one of these spherical, or rather curved cavities, a mass of perhaps half a pound of the shattered stone, 7 inches long by $2\frac{1}{2}$ broad, is firmly embedded, and on examining the cavities themselves several black specks are seen here and there, which the magnifier shews to be parts of the external crust detached from the stone and adhering to the earth!*

The question as to whether the stone was hot or cold at its falling seemed to me at first, as it will seem to every one, settled in the negative by the replies, but a close examination of the state of the earth in the cavities has induced me to change my opinion, and I feel now satisfied that the stone, if not red hot so as to burn and scorch the grass or other vegetation† was sufficiently hot to scorch slightly the soil on which it fell, for not only is the interior of the cavities slightly altered in colour, but upon examination with the magnifier at the edge it is seen to be burnt to a thin film of a yellowish white colour. The whole has exactly (and this to Indian readers will be a familiar comparison) the appearance of part of an old native *chula*.‡

* I need scarcely add that this invaluable specimen has been carefully preserved in a glass case made on purpose for it.

† It seems to have fallen upon bare land of some sort, for there is not a trace of any grass, or of grass roots, about the large lump of earth we have.

‡ Earthen cooking place, portable or fixed, which by long use becomes of a dirty yellowish white colour where the fire is strong.

II.

Mineralogical and Chemical Examination.

Description.

The stone is mainly composed of two distinct minerals, exclusive of the external crust. The first of these is a light, ash-grey, soft mass, very harsh and friable, like soft, friable ash-coloured sand-stone, or pumice, which sometimes runs in narrow whiter bands through the mass. This ash-grey mass is thickly studded with specks and masses of all sizes of a much darker greyish black mineral which has often a bright metallic glance, and sometimes on the polished surfaces a silvery lustre like some varieties of Diallage. Its powder is of a very light ash-grey.

Internally the darker mineral appears loosely aggregated, and sometimes slightly striated on the smoother surfaces, like minute fragments of grey schorl; and in the fractures fibrous and radiated like some varieties of hornblende or actinolite. Its powder exactly resembles that of the lighter coloured portions of the stone.

The light, ash-grey mineral has also interspersed in it numerous black shining specks, which to the magnifier in a bright light have the bright glance of broken particles of black coal, or pitchstone; the black colour being somewhat bronzed in a strong light; these assume all shapes, and are sometimes partly globular like melanite garnets. They rarely exceed in size a hempseed, but have at times a semi-crystallised appearance and are sometimes agglomerated into minute carbonaceous looking nests.

Minute masses, of a very pale green, like olivine, are seen imbedded in the dark grey masses above described, and some of these, particularly at those parts of the stone which are but loosely aggregated, are seen upon very close inspection by the magnifier to be a sort of olivine-looking slag; that is the mineral runs into a pale olivine-like glass, as if it was in the act of crystallizing into olivine, or the olivine was in the act of fusing to a rock. It is not, however, olivine but merely silicate or silico-chromate of iron; the entire absence of magnesia wholly excluding it from the class to which olivine belongs.

The Crust.

The black crust is in most parts closely adherent, but in some few

very loose,* and can easily be detached. It is sometimes, too, of the thickness of thick foolscap or thin drawing paper, which I do not recollect to have seen before noted. It is of a dusky iron black with marks of fusion in many places, and of the black granules being fused into it. It also gives the usual metallic streak. When the internal part of a detached piece of the crust is examined by the magnifier it is seen to be rough and granulated, with some bright metallic-looking specks, but these not distinctly crystallized.

Texture and Coherency.

The state of aggregation of the different parts of the stone is curious, and, from the fragments we have, we may say, generally, that externally for two inches or more, and sometimes as much as three inches, it was in general tolerably compact, so as to bear such polishing as its pumice-like structure will take; but that internally it runs to a coarse agglomeration of small irregular fragments, such as one sometimes sees in coarse gravelly clays when dried. This part is so little coherent that fragments of the stone must be lifted and handled with the greatest precaution not to lose some grains of it, and some will even fall off when carrying a specimen gently from place to place.

We may thus assume that the stone, as a mass in the atmosphere, was fused at its surface to a crust, with a coherent sandstone, or solid pumice-like shell, and internally was a mass of agglomerated grains only!† and this accounts for the stone's shivering itself to fragments by its fall. The loosely coherent state of the more central parts would seem to lend some corroboration of the hypothesis that these bodies are formed in the atmosphere and not ejected from, or the debris of other planets.

Taste and Smell.

It adheres strongly to the tongue, like pumice, in the grey ashy parts, but less so at the darker ones. Its smell when breathed upon is earthy and slightly bitter.

It is harsh to handle, and excessively friable and grating when one piece touches another.

* Perhaps from sudden cooling?

† If it were possible to get a section of these, or to grind down a surface of them, they would, I doubt not give a sort of Widmannstattenian lines like those shewn on meteoric iron; to judge at least by the fracture.

Specific Gravity.

The specific gravity of a fair average specimen, with some crust attached, and which was allowed to part with all its air bubbles was 3.36.

Magnetism.

The black crust only is magnetic. The ash-grey and darker masses are not so, nor do the black grains affect the magnet.

Blowpipe.

The ashy grey mass. In the forceps becomes of a dark greenish brown colour, but does not fuse.

Upon charcoal the same, but the colour is not so deep.

With borax a small splinter partly dissolves, colouring the glass a light grass green colour, and leaving a small dark fragment which does not dissolve.

The *powder with borax on platina wire* dissolves completely, giving a pale or deep grass-green bead according to the quantity employed.

The powder of the darker black mineral is exactly of the colour of the light ash-grey parts.

With borax on the platina wire gives a bright golden grass-green bead which by reflected light has somewhat of an emerald green tinge. Hence I presume that this part contains chromate of iron dispersed in it, in minute quantities, and indeed it appears in some places to run into the black shining specks of chromate of iron above described.

Small pieces digested for a long time in Nitro-Hydrochloric acid. The solution becomes highly coloured with iron, and a little siliceous powder is detached ; but the mass undergoes no farther alteration at the time. After some days however the fragments, after being washed clean and exposed to the atmosphere, are covered with a light greenish yellow coating, shewing that the iron at the surface has passed into the state of the hydrated protoxide.

The Black Grains.

Examined by the magnifier, these are on the fractured surface of a greenish black colour, with a semi-metallic appearance like brilliant fragments of coal ; some of the grains, none of which exceed a small

millet or hemp-seed in size, have an imperfect garnet-like (dodecahedral) crystallization.

The powder of them is a dull, ashy, reddish brown. The powder of crystallized chromate of iron from our collections, which on the fracture exactly resembles these grains, is of a dull greenish black. Both powders preserve brilliant points in them, though rubbed to the utmost fineness.

In the forceps, in both flames: becomes somewhat dull but does not alter.

Fused with soda on charcoal, the powder gives only the traces of iron. When nitrate of potash is added to the bead on platinum wire a yellow greenish opaque bead is obtained.

With phosphate of soda and ammonia a green bead.

With borax on platinum wire a fine emerald green bead is obtained, with minute black grains, which seem infusible in it. When Nitrate of potash is added to the borax, the whole is fused to a clear dark bottle-green grass.

When the powder was fused in a platina crucible with borax, to which nitrate of potash was gradually added, it slowly fused to a very pale yellow mass, which was mostly soluble in water; a little silica only remaining, and when filtered it gave a pale green yellow solution from which chromate of lead was obtained by acetate of lead, but the precipitate by this process was at first of a lighter yellow than usual, and only assumed the usual bright yellow of chromate of lead on the filter. I am of opinion that these black grains are, like the residual ones noticed in my examination of Captain Sherwill's Meteoric Iron (Journ. Vol. XVII. Part X. p. 549), a siliceous sub-chromate.

The Crust.

I collected by the help of a magnifier a few fragments of the black crust from amongst the fragments and dust, but it was very difficult to find any so completely detached from the grey mass as to be purely crust; one or two so found appeared crystallized in minute brilliant facets or needles on the inner surface; and I am inclined to think that the greater part of the crust is really crystallized on its inner surface though outwardly it only appears rough and as if semi-fused.

Before the blowpipe.—Alone, infusible and unalterable.

With borax on platinum wire, a minute fragment fused partially but very slowly. The glass was coloured of a pale green.

When nitrate of potash is added to the bead of borax, it fuses quickly and entirely to a pale grass green.

A portion of the crust, in powder, fused in a crucible with nitrate of potash gave only a pure white mass, which, dissolved in water leaves a dull red sediment and this by solution in muriatic acid is found to be iron with a little silex. No traces of chromium could be detected in these minute assays, but it would doubtless be found where the black grains appear fused into the crust.

Analysis.

By a careful examination the complete absence of nickel, cobalt, and magnesia were established, and the results per cent. were as follows :—

Water, ...	0. 12.	
Arsenic, ...	trace.	
Sulphur, ...	0. 10.	
Iron peroxide, ...	26. 80.	protox 24.48.
Silica, ...	68. 60.	
Alumina, ...	0. 50.	
Oxide of Chrome,.....	2. 00.	
	98. 12.	
Loss, ...	88.	
	100. 00.	

The black grains are chromate or sub-chromate of iron, and hence a variable portion of the assay, depending on the quantity of these and probably of that of the darker portion of the Aerolite, will be always in the state of chromate of iron ; and the excessive friability of the mass is explained by the absence of alumina and the earthy state of the silica.

Reviewing this paper : Every lover of science will join with me in repeating our obligations to Mr. Mactier for his active zeal in procuring for us this valuable specimen, and in regretting deeply that we have been unable to secure the entire stone, or at all events a good sectional fragment of it, by which we might have obtained some better insight into its state of aggregation at the centre, and hence have ascertained if it had any nucleus ; and I cannot close without earnestly impressing

on the minds of all who may read it, the great service which they cannot fail to render to the cause of science by securing immediately, and guarding with the utmost care, every stone, known or reputed to be a meteoric one, so soon as information of it reaches them, if by any means this can be done; and it would seem that a formal notice to the nearest Thannah that such stones were the property of Government would not fail to insure due care being taken of them? I need hardly explain that these (fragments of other worlds?) are perhaps not remotely connected with great questions of Astronomy and Cosmology, and that the labour of those who bring the materials to men like Herschell, Humboldt, Strüve and so many more, humble as it seems, is yet important and indispensable, and has its share of honor from every right-thinking mind.

APPENDIX.

I have thought it worth while reprinting at full length the queries sent by me to Mr. Maetier, to assist in obtaining for us good information on any future occasion. I have no doubt that many stones fall in India of which we never hear, but no opportunity should be lost of securing all we can obtain, both in the way of information and specimens.

Queries to which it is desirable replies should be obtained from all persons near the spot where Meteorites fall—from separate witnesses, and as facts within *their own* knowledge; not by hearsay.

Name and profession of deponent.

2. Where was he when it fell and at what time did it fall?

3. Where did it fall? describe the spot exactly.

4. What kind of ground did it fall upon (send a good specimen of the soil) and describe it particularly as to rocks or stones, or alluvial or arable land?

5. How far from any water?

6. How many pieces?

7. What became of the other pieces? (If any small ones can be found near the spot like it, or with a black crust, send them).

8. How was the sky when it fell?

9. What noise did it make?

10. Was there any blaze of light with it, or any wind blowing at the time?

11. When did you first see it?

12. Was it hot or cold then?

13. Did it seem to have burned any thing? or to have *dried up* the ground where it fell?

14. Was the stone or the ground smoking when you first saw it?

15. Was there any smell about it?

16. How was it lying when you first saw it? i. e. lying flat? or sticking up? If sticking up in the ground shew how, viz. if upright or at what angle nearly?*

17. When dug out, was there any sign of burning or baking of the earth at the lower part? if so send some of that earth; 3 or 4 seers at least.

18. Did it get warm, or hot, *after* it fell?

19. Did any change of its colour take place? and of what colour was it in a clear daylight when you first saw it?

20. What kind of weather was there the day and night previous to the fall of the stone?

21. Did you ever hear of any stones of the kind having fallen before.

22. Was any wind blowing; and from where?

Memorandum. It will be advisable to let each deponent tell his own story separately in the form of a narrative, and then cross question from these queries adding any other particulars. If sent in Bengalee or Hindustanee also, they will be welcome to us. The references to the queries and their replies should be distinguished by their numbers, and the more witnesses and information the better.—H. Piddington.

Translation of Vichitra Nátak.—By Captain Siddons, *1st Cavalry.*

Chapter III.

God pleased to promote anger and strife
The best of men could not stand neutral,
Lust and avarice were so potent

* Witness should shew this which is very important by sticking a stone or brick or log into the ground.

Mighty heroes could not avoid them.
By these excited, madly they fought,
And using their weapons in fierce strife
They maimed and slaughter'd each other;
The devil rejoicing drumm'd merrily.
Sheo* wore his necklace of human skulls,
Imps rejoiced, and demons urged to war;
Vultures and hyænas prowled about,
And dead bodies thickly strewed the ground.
Oh! there was hacking and many wounds,
Hands grappling arms, beards with fury pulled!
Heads broken, sinewy arms lopped off,
And many chettries† pierced with arrows.
Wild beasts skulked on every side;
Animals of every kind were glad.
And ogres mixed with the happy groups;
'Cause there were carcases enough to eat.

The shouts of heroes equalled the thunder;
They planted their flags in deadly hatred;
Full of anger, they fought with sword and spear.
Foot to foot on the ground, these heroes fought.
The swords of the brave clashed fearfully;
Their iron weapons dealt destruction.

Battle axes, spikes, and double-edged swords,
Short swords and daggers, and forsooth weapons
Of every kind and shape, were flashing
Around, about, and simultaneously.
By wrath excited, the men were reckless,
And fearlessly they wielded their weapons.
Mad with deadly hatred, they heeded nothing,
But, hurling defiance, they cut and slash'd about them.

Thousands of fairies came from heav'n to see
The combat, vociferating "Fight—Fight!"
Some men lost limbs, many bandaged their wounds,

* *Sheo*—Siva. † *Chettries*—men of the second or military caste.

The flesh of others was hack'd to pieces,
And warriors strewed the red ground in heaps.
There was a clamour of shields, of loud drums,
Mix'd with groans, as these heroes contended.
Now they pause, but only to bend their bows
And shoot their arrows. Then again with swords
To wound,—wounds which are, nor felt, nor cared for.
Phrenzied with rage, lo! neither party flies,
The din of battle, mocks heaven's thunder.
They dare each other to single combat,
And gladly yield their souls to paradise.
Their angry blades flash sparks like lightning.
Shouts rend the air. Death, death, the only cry!
They roll on the ground in deadly struggle
And hurl defiance, even as they die.
Blood flowed in streams, and fairies hover'd near.
Káli applauded, evil imps rejoiced,
And manly shouts, shamed the loud thunder.
The armies engaged with a violence,
And roar, like as the sound when oceans meet.
Fiery coursers plough the soil. Dripping
With red blood, Deví, who knoweth all things,
Gave encouragement, and fierce beasts who live
On bodies, howled with joy; elephants and
Horses cumber'd the earth, their carcases
Mix'd in sad confusion with their riders!
Both sides claimed victory. If either were forced
Back, it rallied, and fought more fiercely still.
Blow after blow was dealt, quick as lightning;
And the arm of hatred was as active
As larvæ in the water!

The warriors were inflamed as warriors never were before, and the inspiriting kettle-drums roused them to deeds of daring and boldness. Cut to pieces and pierced with arrows, they still fought on. The youthful and the veteran alike fell in this great battle. And many reeled and staggered as if they were drunk with blood. Sounds of warlike instruments, mingled with the shouts of war. And clouds of

arrows obscured the golden sun ; the sight was awe inspiring, and the battle terrible as that which was fought between Indra and Britrásúr ; the field of contest was crimsoned as though the Hooly had been celebrated on it.

Those who remain'd to fight, were all slaughter'd ;
Who fled, for ever mourned their cowardice.
Awful confusion prevailed everywhere,
Armour and swords were scatter'd all about ;
Heads with distorted faces, clotted beards
And gory trunks, mix'd with dying horses.

Kál spared not one of these mighty warriors who contended so fiercely in this terrible battle, all perished ; but their sins were forgiven them ; they were hewn in pieces and died the death of brave men. Earth recorded their fame, and their souls found rest and immortality in Paradise.

This was indeed a terrible battle, and mighty were the heroes who fought in it, and are now in the ranks of the blessed. But I must not add more in their praise, for to do so would be like extolling my own excellence, since I am of them, and from them. Enough! the followers of Lav were victorious, and the army of Kúsh was defeated, the small remnant of the latter who escaped, fled to Káshi and studied the Véds. They remained there many years.

This concludes the 3rd Chapter, describing the great battle between Lav and Kúsh.

Chapter IV.

Those who adopted the Véds were called Védis
And walk'd in the paths of religion with zeal,
The king of the Punjáb sent messengers greeting,
And begged them to return to friendship and love.
The Rájá's messengers arrived at Benares
And straightway told all that their master bid them say ;
On which, the Védis went to Rájá Madnedésh
And bowing low, they humbly made obeisance.
In open court, surrounded by his great chieftains
And proud nobles, the Rájá had the Veds read to him.
He listened with great piety ; the Sám, Yajus
And Righa Véds, were fully explained to him.

And when his mind had comprehended well, the fourth,
Or Atharv Véd, his sins instantly forsook him.
Full of religion, he gave up his kingdom
To the Védis, and sought the shelter of the woods.
There to reflect, and make atonement for his crimes,
His people all went with him, and remain'd content
That he, their king, had giv'n up all for God.
The Védis rejoiced to get the kingdom,
And most diffusely scattered their alms ;
They promised, in the iron age to come
As Nának, and take the king to heaven.
The race of Lav dwelt in solitude and
The Védis enjoyed their possessions.

Oh king ! just as thou listenedst to three Véds in silence, but on hearing the fourth, gave up thy soul to penitence, and thy kingdom to us, so we shall pass through three stages of existence, and at our fourth coming, thou shalt be made a Gúrú.

The Rájá comforted with this assurance, arose and went to the forests, and the Védis were happy in the possession of their new kingdom. To what length shall I extend my narrative ? I fear my volume will be a bulky one !

This concludes the 4th Chapter which tells of the king of Lav and the Holy Véds.

Chapter V.

In the course of time, however, the Védis were subjected to feuds and animosities, which the wisest among them were unable to quell or avert, and after many struggles, their race became almost extinct, for Bráhmans demeaning themselves, became almost as Súdras, Kshétris resembled Baishyas, whilst Baishyas were as Kshetris, and Súdras were exalted to Bráhmans.

The Védis retained some twenty villages, the remnant of their large possessions, and became cultivators of the soil ; they continued to be farmers for a long time, until at length Nának appeared on earth.

Nának did not long remain with this remnant of his tribe, he wandered among the Sikhs, and imparted comfort to them and religious consolation.

In this iron age, he taught his doctrines
And pointed out the true religion.
Such as listen to his precepts and walk
In his ways are free from sin, and happy,
God put away the sins and cheered the hearts
Of all those who became his disciples ;
They suffered neither sorrow, nor hunger.
*Nor were entrapped within the net of time.
Nának afterwards appeared as Angad,
And lived religiously in the world ;
Then, as one lamp receives its shining light
From other lamp, he came as Amar-dás ;
Then as Rám-dás, when, having quite fulfilled
†His promise to the Rájá, he went to heaven.
These four were emanations of one spirit
Which *fools* repudiate, but wisdom understands.
Many believ'd they were distinct persons,
Only a few acknowledg'd them as *one*.
These latter reaped the reward of good faith,
And unbelievers lost by their folly.
Rám-dás was absorbed in omnipotence,
But the spirit of this Gúrú once more
Descended, and took the form of Arjún.
When Arjún sought the realms of happiness
Lo ! he was succeeded by Hargovind,
And after Hargovind, there came Himrái ;
Har-kishn then, then follow'd Tegh Bahádúr
Whose sacred cord the God of gods revered ;
His fame was glorious in this iron age,
For all his words were wise, his actions good ;
‡He gave his life, a Martyr to his faith !
True to his creed, unflinching, lo ! he died.

* Which signifies "They obtained their pardon."

† Vide 4th Chapter.

‡ The great but bigoted Emperor Aurungzéb seized the reformer Tegh Bahádúr, and having in vain endeavoured to make him forswear his religion, put him to death by skinning him alive, after which he was decapitated and his head exhibited publicly.

His head they took, but could not turn his heart;
And thus it is, apostates are abhorred
By living man, and scorned by the undying God.
His death brought shame on the Muhammedan,
Though his soul went to everlasting bliss.
Dear is thy memory, Tegh Bahádúr!
Earth mourn'd its separation from thee,
And heaven welcomed thee with shouts of joy.

(*To be continued.*)

Note.—The reader is requested to make the following corrections in the first two chapters of the Vichittra Nátak published in the last volume of the Journal.

In page	521	line	26 for "second"	read *sword.*
,,	—	,,	27 for "Even"	read *ever.*
,,	522	,,	8 for "playing"	read *blazing.*
,,	—	,,	18 for "desirest"	read *derivest.*
,,	524	,,	8 for "at"	read *as.*
,,	531	,,	21 for "bad"	read *had.*
,,	532	,,	2 for "Kapur"	read *Kassur.*
,,	—	,,	15 for "Sauand"	read *Sanoud.*
,,	—	,,	27 for "houses"	read *horses.*

On the adaptation of the Aneroid *for the purposes of surveying in India.—By* G. Buist, LL. D., F. R. S., L. & C., F. G. S. *&c.*

One of the greatest desiderata with travellers, is to be able to obtain an instrument for measuring elevations, of moderate size, considerable portability and immunity from injuries from the accidents apt to be encountered in journeying through new countries; a great degree of nicety or exactitude is rarely attainable on a first visit, and is willingly dispensed with in comparison to tolerable approximations when only attainable at the expense of much outlay, trouble and loss of time. The mountain barometer can be made tolerably portable so far as size and weight are concerned, but is in its strongest and most efficient form so extremely liable to accidents, so expensive, and so difficult in India to get repaired or replaced that few travellers in the East care to be encumbered with it at all. The Mountain Thermometer has done excellent barometric service in India; but it has seldom happened that instruments, cut finer than fifths of a degree, have been made use of—at moderate altitudes one degree corresponds with five hundred feet of elevation, so that even when degrees are cut to tenths, the smallest division will not indicate less than fifty feet. A good barometer read-

ing to thousands will indicate ten feet. The Mountain Sympiesometer scarcely seems to have been made use of at all amongst us; wherefore I know not: the instrument is quite as portable as the Aneroid: it is much less susceptible of injury than the Mountain Thermometer, but is apt on being long used in this country to change its rating. Both the Aneroid and Sympiesometer in their best forms require to be verified by frequent reference to a standard barometer. The Mountain Thermometer has this advantage over both that once rated it runs little risk of going sensibly wrong. I say sensibly, for by a late paper of Mr. John Adie's it appears that even Thermometers in the course of time alter their indications.* The Mountain Thermometer, portable as it is, is far from being exempt from accidents, and besides being apt to be broken in carrying about or in heedless handling while being boiled, the air is liable to get entangled with the mercury, an accident often occurring to such an extent as to occasion the risk or destruction of the instrument.†

* Mr. John Adie of Edinburgh has published a very elaborate article in the Edinburgh Philosophical Journal of January, 1850, on the change which takes place in the starting points of Thermometers, often amounting to no less than nine-tenths of a degree in a few months; this is equal to 450 feet in elevation, supposing the thermometer to be cut to tenths, there being no means of detecting or remedying the error. I do not think any Aneroid or Sympiesometer likely under any circumstances to go wrong to the extent of half an inch, nearly the equivalent of this, if they have been tolerably taken care of from the time of their last rating by the standard Barometer or reference to some point of known elevation.

† The following description is given by Mr. Adie, of the Mountain Thermometer as supplied by him to the Bombay Geographical Society. "The Thermometers for the determination of altitudes by the boiling point of water are constructed as follows: A piece of tube is selected of perfectly equal calibre throughout its length; the section of the bore is round and fine, for the purpose of giving long degrees without having a very large bulb, which renders the carriage of such Thermometers, very dangerous for breakage; the bulb is made of glass cylinder tube, which can be made more equal and stronger than a round bulb: and the proper size having been determined for each tube, the scales are determined by the following process: each tube with its finished bulb is weighed by a fine balance to 1.100th of a grain: they are then fitted with pure dry mercury and regulated so that 62° shall have the same position as 212° is to have when the Thermometer is finished.

Temporary scales, divided into inch and decimal parts, are then fixed to each tube, and the point 32° obtained from melting ice, and 62° from a fine standard Thermometer, and carefully read off on these temporary scales. This gives the

Under all these circumstances were the improvements of which the Aneroid is susceptible carried into effect, it is, taking it altogether, one of the most convenient instruments of which the traveller can make use within the limits to which it is trustworthy, whatever these may be. The following description of the Aneroid taken from Dr. Purdie (Thompson's Manual) will make what is about to be stated more clear than it otherwise might have been.

length of 30° at these temperatures. But it is evident that this length would be greater than 30° if we drive out a portion of the mercury, to make 212° stand at the point where 62° stood when the scales were measured. This is corrected by carefully weighing the tubes before and after regulating them for 212°, and the proportion is stated: if the larger quantity of mercury give the length noted, the diminished quantity of mercury from regulation to 212° will give a diminished scale, which scale is the true or corrected one, to be divided on the thermometer; each degree is subdivided into fifth or tenth parts and cut on the glass stem of the thermometer; or may be laid down on an attached scale.

When the thermometer is to be used, the bulb must be carefully inspected to see that there are no small detached globules of air attached to the interior of the bulb: should such be found they are to be removed by shaking in a larger globule from the contracted part of the bulb, and making it pass over the smaller globules, which it will take with it; it is then to be returned to the contracted part; and should any small portion of the mercury lodge in the tube, it is to be joined to the column by heating the bulb till it rise to the small bulb at the top of the thermometer, where the detached portions will unite.

The best *method of using* these Thermometers is to have the bulb and column of mercury up to the reading point brought to the boiling temperature: this is best done by a boiler provided with telescope slide-tubes, which can be regulated to any required length; or where such an apparatus is not at hand, the same length of column, as nearly as possible, should be kept out of the water. Professor J. D. Forbes (Philosophical Transactions, Edinburgh, Vol. XV, page 409) has with great care determined the difference of altitude due to a change of 1° in the boiling point of water, and found it to be 549. 5° for each degree of Fahrenheit. Thermometers used for this purpose should be frequently compared one with another, and their differences noted; or where one only is used, the instrument should be noted as frequently as possible, both for the purpose of obtaining more perfect results from a mean of the observations, and for correcting small changes in the indication which go on in course of time.

For security in carriage, the Thermometer is enclosed in a brass case and supported at all points by woollen stuffing, and is removed from its case by screwing off the top and bottom, and pushing out the bulb when the Thermometer may be drawn out."

*Aneroid Barometer.** "Since writing the preceding paragraph, the author has inspected† this new and beautiful instrument, invented by M. Vidi. It was described by Professor Lloyd to the British Association,‡ and reported to have stood the test of being placed under the receiver of an air-pump, when the indications corresponded with those of the mercurial gauge to less than 0.01 inch. The principle upon which the instrument depends, is the pressure of the atmosphere upon a metallic chamber partially exhausted, and so constructed, that by a system of levers a motion is given to an index-hand which moves upon a dial.

"The principle of the vacuum-case was formerly applied by M. Conte § in Egypt, but from the faulty mode of constructing his instrument, it was rejected and neglected.

"Upon comparison of indications made with the Aneroid Barometer —not corrected for the particular temperature—and a very perfect mercurial barometer, given by Mr. Dent, we find that from forty-nine observations made between the 6th January and 23rd February, 1848, the mean difference was 0.037 inch, the *aneroid* being in excess: and from sixty similar observations made with a standard barometer, during December, 1848, and between the 3rd and 31st January, 1849, the mean difference amounted to 0.026 inch, the *mercurial* being, in this case, in excess over the aneroid barometer. Combining these observations (109 in number) a mean difference amounting to 0.0025 inch is found to exist, the indications of the aneroid being in excess. ‖ For general use, the instrument is thus shewn to be well suited; for the measurement of heights it is peculiarly adapted, from its portability and comparative strength; and for nautical purposes we know of no better instrument.

* *a* privative, *νηρός* and *εἶδος*—a form without moisture. See Dent on the Aneroid Barometer; Mech. Mag. No. 1307.

† At Mr. Abraham's, Lord Street, Liverpool. The price is £3. It is $4\frac{3}{4}$ inches in diameter, and $1\frac{3}{4}$ inches thick. The scale is divided to 0.025 inch.

‡ At Swansea, in 1848.

§ Bulletin des Sciences. Floreal, An. 6, p. 106.

‖ The sum of all these observations gave 3239. 712 inches for the aneroid, and 3239.44 inches for the mercurial barometer, the difference being 0.272 inch, which divided by 109, = 0.00249.

"Fig. 1. represents the external appearance of the Aneroid Barometer: Fig. 2. its internal arrangement, where the dial is supposed to be removed and the index-hand retained; and Fig. 3. a perspective view of the same.*

"In Fig. 2. *a* is the metallic chamber or vacuum-vase, which receives

Fig. 1

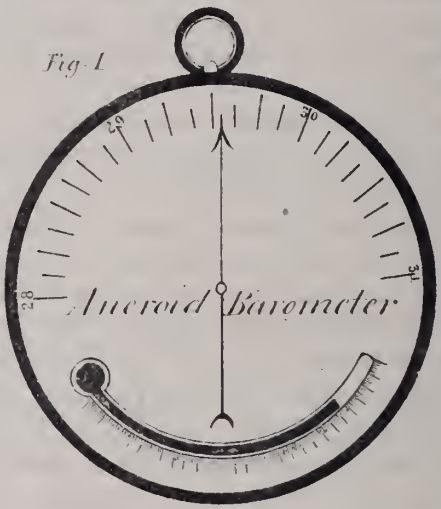

Fig. 2

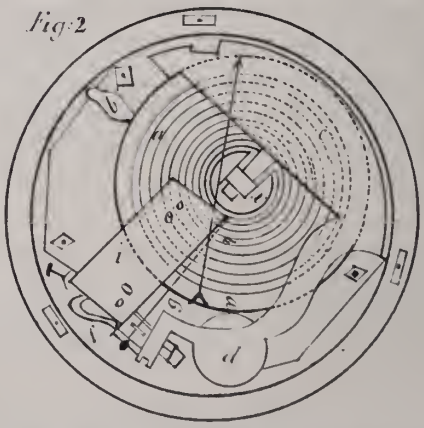

* We beg to acknowledge the kindness of Mr. Dent, in permitting casts to be taken of Figs. 3, 4, and 5,—Aneroid Barometer.

the atmospheric impressions; it is corrugated in concentric circles, which increases its elasticity, and renders it more susceptible of atmospheric impressions; *b* is the tube, hermetically sealed, through which the air in *a* is exhausted. At the centre of *a* there is a solid cylindrical projection *x*, to the top of which the chief lever *c d e* is attached —this lever, which is of the second order, rests upon 2 fixed pins, or fulcra, placed vertically, and upon a spiral spring under *d*, but it is perfectly mobile. The extremity *e* of this lever is attached by a vertical rod and bow-shaped spring *f*, with another lever to which a watch-chain *g* is fastened and extended to *h*, where it works upon a drum fixed to the axis of the index-hand, connected with a delicate spring at *h*,—the vertical motion is thus changed to a horizontal one, and the hand, which is attached to the metallic plate *i*, is thereby moved upon the dial. The movement originating in the vacuum-chamber is multiplied by these levers, so that a change in the corrugated surfaces, amounting to 1-220th of an inch, carries the point of the index-hand through a space of three inches on the dial.

"In Fig. 3. the vacuum-chamber is represented by D; the large lever by C, resting upon the fulcra B B and spiral spring S, and supporting the box D by the pin K. At the extremity of C is seen the vertical rod (1) connecting it with the levers (2 and 3) by the bow-

Fig. 3

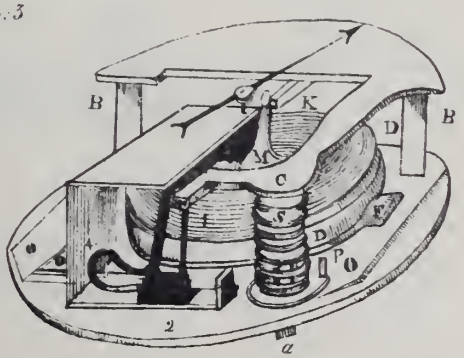

shaped spring (4). The square-headed screws *b e*, by screwing or

unscrewing, admit an alteration in the distance of leverage, and thereby enable the index-hand to move over a space corresponding with the scale of a mercurial barometer. To the lever (3) is attached a light rod terminating with the watch-chain, which is attached to the drum fastened to the axis. The handle is kept firmly fixed, when not in motion, by a delicate flat spiral spring attached to the axis, acting against the force of the levers, and always in a state of tension. F is the exhausting tube ; and A, at the back of the instrument, is a screw, which upon being turned, alters the position of the index-hand, and thus enables the observer to adjust the aneroid to any mercurial barometer. The atmospheric pressure increasing on D, will cause a slight depression of the corrugated surface to which K is attached, and a corresponding inclination of the lever C ; but as this lever is resting upon unmoveable fulcra at BB, the motion will take place chiefly over the spiral spring S, the increased distance of the lever being as six to one. The metallic chamber being 25 inches in diameter, the pressure of the atmosphere should be about 73 lbs. upon the corrugated diaphragms, but owing to various causes it is not more than 44 pounds.

" Figs. 4. and 5. represent the vacuum-case, separated from the levers. The former shows the case before exhaustion ; the latter after the air has been withdrawn. *a a a a* indicate the lapping over of the thin corrugated metallic diaphragms, where they are soldered to the rim ;

Fig. 4

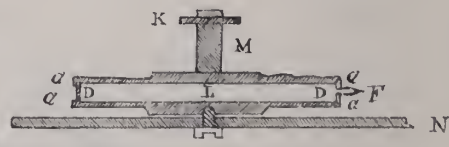

Fig. 5.

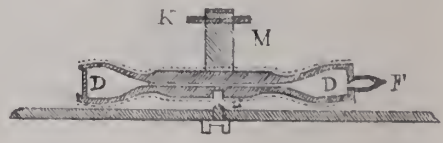

D is the vacuum chamber, with F the exhausting tube ; and L the screw part fixing D to the metallic plate N below. In Fig. 5, the vacuum-case is in a state of compression after being exhausted, and M represents the socket, which being pulled by the pin K, places D in a

state of tension. The dotted line marks the position of the diaphragms after the introduction of the gas, which effects compensation for changes in the capacity of the case by alterations of temperature. Without this gas the capacity of the case would be diminished by heat, and increased by cold, but the changes in the elasticity of the gaseous fluid by varying temperatures, effect compensation. In using the Aneroid Barometer for scientific purposes, a certain thermometrical correction is required. This is made by carefully noticing the indication of the instrument in the external atmosphere, then placing it before a fire till the thermometer indicates 100° F., and watching the change which has taken place. The variation of the hand, divided by the degrees of the thermometer, gives the quantity for each degree. The amount will be sometimes in excess, occasionally in defect."—*Dr. D. P. Thomson's Introduction to Meteorology*, pp. 447—452.

The following are the readings of various comparisons taken by the Aneroid and Barometer made at different elevations up to 2000 feet above the level of the sea. Further than this I have not gone.

The survey station at Neat's Tongue, between Trombay and Mehal, exactly 1000.6 feet above the mean level of the sea, as ascertained by theodolite, afforded a very suitable place for experiment; and the collection of instruments in possession of the Geographical Society offered a most convenient opportunity for determining the point. The beautiful standard barometers by Adie, 2, 3, and 5 were with three Aneroids now selected for comparison. Barometer No. 4, was left at Balcairn, about seventy feet above the level of the sea, and No. 1 in the Geographical Society's Rooms, thirty-five feet lower, for reference. The first observation was made at 5 P. M., about half way up the hill, where barometer No. 4, stood at 29,600, temperature 84°; at Balcairn it had stood at 29,874 at 3 P. M., temperature 86° : it had thus fallen 00.274. The three Aneroids stood as follows—

	No. 3187	No. 1942	No. 1737
Aneroid, 70 feet above sea, ...	29.945	29.860	29.850
Neat's Tongue,.....	29.626	29.552	29.560
Difference	319	308	290

Mean. 306. There was no time to try more than one barometer here. On the top of the hill three barometers were made use of

exactly at the survey station, the cisterns were six inches above ground. The following is the result.

	No. 2	No. 3	No. 5
Barometers at Balcairn at 3 P. M.	29.882	29.849	29.874
Barometers at Survey Station at 6 P. M...	28.966	28.986	28.984
Difference	.916	.863	.890

Mean .889. The temperature at Balcairn was 5° higher than that above : no correction for this was at this stage made.

Aneroids as above, ...	29.945	29.860	29.850
	28.900	28.888	28.950
Difference	1.045	.972	.900

Mean .972. Difference from barometric mean .083

The following experiments were made at the level of the sea at half tide, and at Balcairn, on the summit of the rock close by ;

	No. 2	No. 3	No. 5
Barometer, lower	29.936	29.914	29.926
Barometer, upper	.860	.836	.856
Difference	.076	.078	.070
Aneroid, lower	29.910	29.830	20.923
Aneroid, upper	.840	.770	.850
Difference	.070	.060	.073

The mean depression of the aneroids was thus .067, that of the barometers was .074—difference .007—seven thousandth parts of an inch. When the difference of level between two places is trifling, one tenth of an inch of depression represents 100 feet, so that Balcairn by this is about seventy feet above the level of the sea. Leisure was not allowed to make any of these observations with the care required : the barometer when carried about in the sun ought always to be allowed to hang in the shade for a sufficient length of time to permit the mercury in the cistern and tube to obtain the same temperature as that in the attached thermometer, forbidden by Sir J. Herschell to be immersed

in the cistern. Had due precautions been used, the results, would most likely have been all in favor of the aneroid.

The following were then tried at Parell Hill—first at the point where the road from the gardens crosses; then in the turret at the base of the flagstaff. Barometer No. 4, which was left below stood at 29.960 at a quarter to seven: the observations were all made betwixt this and half-past seven.

	No. 2	No. 3	No. 5
Barometer, lower	29.940	29.920	29.916
Barometer, higher	.840	.828	.830
Difference	.100	.092	.086

giving a difference of elevation of about 90 feet. The aneroids stood as follows, the instruments being arranged in the same way as before;

Road Station, ...	29.885	29.850	29.910
Flagstaff, ...	.815	.740	.815
Difference	.070	.110	.095

giving a mean of .092 nearly: a singularly close coincidence indeed, the barometers in both cases having got heated in the sun, and no time to allow the mercury to cool to the temperature of the attached thermometer. The following ratings made at the observatory betwixt the great standard and an aneroid are for two motives still more satisfactory as being more full from May till December; the discrepancies are so great that they can only be explained on the assumption of the instrument having got out of order. We have taken no account of the difference betwixt the instruments, as they may be so adjusted as to work together, the daily range being the great test of delicacy.

Comparison betwixt the Standard and Aneroid Barometers made at the Observatory, Colaba, betwixt January and December, 1850, *with the range of each, showing the remarkable diminution of the Aneroid in the Course of the Year.*

Month.	Barometer.		Range.	Aneroid.		Range.
	Max.	Min.		Max.	Min.	
January, 1850.						
7th, ...	29.980	29.839	.141	29.90	29.80	.10
8th, ...	.922	.780	.142	.85	.72	.13
9th, ...	.856	.720	.136	.81	.69	.12
10th, ...	.861	.742	.119	.80	.70	.10
11th, ...	.929	.798	.131	.88	.70	.18
12th, ...	.908	.800	.108	.93	.71	.22
13th, ...	..	.791	..	..	.70	..
14th, ...	.875	.755	.120	.78	.66	.12
15th, ...	.910	.790	.120	.80	.69	.11
16th, ...	.931	.798	.133	.85	.71	.14
17th, ...	.919	.795	.124	.82	.72	.10
18th, ...	.914	.805	.109	.82	.74	.08
19th, ...	.930	.797	.133	.83	.74	.09
20th, ...	..	.896	..	..	.80	..
21st, ...	.980	.842	.138	.88	.75	.13
22nd, ...	.941	.833	.108	.84	.75	.09
23rd, ...	.930	.810	.120	.81	.71	.10
24th, ...	.929	..	..	.81	.70	.11
25th, ...	.960	.833	.127	.81	.72	.09
26th, ...	.957	.833	.124	.87	.75	.12
27th, ...	..	.844	..	..	.75	..
28th, ...	.953	.844	.109	.87	.75	.12
29th, ...	30.003	.844	.159	.85	.80	.05
30th, ...	.015	.892	.123	.90	.80	.10
31st, ...	29.994	.880	.114	.90	.80	.10

Month.	Barometer.		Range	Aneroid.		Range.
	Max.	Min.		Max.	Min.	
February,						
1st, ...	29.981	29.865	.126	29.88	29.80	.08
2nd, ...	30.017	.850	.167	.97	.80	.17
3rd, ...	..	.948	..	..	.89	..
4th, ...	.059	.927	.132	30.00	.89	.11
5th, ...	.050	.928	.122	.00	.88	.12
6th, ...	.026	.876	.150	29.99	.85	.14
7th, ...	.027	.882	.145	30.00	.89	.11
8th, ...	.019	.908	.111	.00	.89	.11
9th, ...	.053	.901	.152	.01	.88	.13
10th, ...	..	.902	.	..	.90	..
11th, ...	29.981	.884	.097	29.96	.87	.09
12th, ...	30.015	.856	.159	.99	.86	.13
13th, ...	.013	.883	.130	.98	.85	.13
14th, ...	.002	.880	.122	.99	.83	.16
15th, ...	29.999	.852	.147	.96	.82	.14
16th, ...	.994	.844	.150	.94	.80	.14
17th, ...	..	.863	..	..	.83	..
18th, ...	.976	.847	.129	30.00	.83	.17
19th, ...	.997	.875	.122	29.95	.93	.02
20th, ...	30.024	.905	.119	30.08	.98	.10
21st, ...	29.997	.835	.162	.04	.90	.14
22nd, ...	.936	.733	.143	.00	.88	.12
23rd, ...	.986	.832	.154	.01	.93	.08
24th, ...	.971	.855	.116	.02	.93	.09
25th, ...	..	.854	..	..	.98	..
26th, ...	.970	.847	.123	.02	.93	.09
27th, ...	.986	.837	.149	.04	.95	.09
28th, ...	.965	.830	.135	.01	.92	.09
March,						
1st, ...	.980	.829	.151	.03	.92	.11
2nd, ...	.985	.821	.164	.04	.90	.14
3rd, ...	..	.844	..	..	.91	..
4th, ...	.954	.823	.131	.01	.90	.11
5th, ...	.952	.820	.132	29.91	.80	.11
6th, ...	.927	.800	.127	.90	.79	.11
7th, ...	.988	.850	.138	.95	.81	.14
8th, ...	.962	.818	.144	.92	.80	.12
9th, ...	.972	.794	.178	.94	.78	.16
10th, ...	..	.873	..	..	.85	..

Month.	Barometer.		Range.	Aneroid.		Range.
	Max.	Min.		Max.	Min.	
March,						
11th, ...	29.895	29.864	.031	29.95	29.84	.11
12th, ...	.979	.864	.115	.95	.84	.11
13th, ...	.925	.805	.120	.90	.79	.11
14th, ...	.925	.810	.115	.90	.80	.10
15th, ...	.948	.832	.116	.91	.80	.11
16th, ...	.936	.822	.114	.91	.81	.10
17th, ...	..	.873	..	..	.86	..
18th, ...	.971	.828	.143	.94	.81	.13
19th, ...	.978	.844	.134	.94	.84	.10
20th, ...	.942	.794	.148	.91	.80	.11
21st, ...	.922	.808	.114	.90	.80	.10
22nd, ...	.941	.812	.129	.92	.80	.12
23rd, ...	.991	.849	.142	.98	.85	.13
24th, ...	..	.907	..	..	.90	..
25th, ...	30.029	.882	.147	30.01	.90	.11
26th, ...	29.973	.846	.127	29.98	.85	.13
27th, ...	.947	.844	.103	.95	.86	.09
28th, ...	.978	.836	.142	.98	.85	.13
29th, ...	.966	.816	.150	.95	.84	.11
30th, ...	.918	.765	.153	.97	.81	.16
31st, ...	..	.793	..	..	.92	..
April,						
1st, ...	.886	.783	.103	.92	.83	.09
2nd, ...	.907	.818	.089	.97	.89	.08
3rd, ...	.933	.816	.117	.98	.89	.09
4th, ...	.947	.787	.160	30.00	.84	.16
5th, ...	.896	.782	.114	29.95	.84	.11
6th, ...	.926	.755	.171	.98	.80	.18
7th, ...	..	.782	..	..	.84	..
8th, ...	.857	.756	.101	.91	.81	.10
9th, ...	.826	.707	.119	.87	.74	.13
10th, ...	.859	.728	.131	.88	.80	.08
11th, ...	.884	.740	.144	.90	.79	.11
12th, ...	.859	.728	.131	.88	.76	.12
13th, ...	.867	.752	.115	.90	.81	.09
14th, ...	..	.773	..	..	.80	..
15th, ...	.861	.773	.088	.94	.80	.14
16th, ...	.904	.779	.125	30.01	.90	.11
17th, ...	.894	.780	.114	.01	.91	.10

Month.	Barometer.		Range.	Aneroid.		Range.
	Max.	Min.		Max.	Min.	
April,						
18th, ...	29.883	29.783	.100	30.00	29.91	.09
19th, ...	.903	.795	.108	.02	.92	.10
20th, ...	.895	.777	.118	.01	.91	.10
21st, ...	..	.831	..	.	.88	..
22nd, ...	.928	.800	.128	.07	.94	.13
23rd, ...	.942	.768	.174	.08	.91	.17
24th, ...	.907	.736	.171	.06	.90	.16
25th, ...	.828	.688	.140	29.98	.85	.13
26th, ...	.827	.679	.148	.98	.84	.14
27th, ...	.820	.707	.113	.97	.89	.08
28th, ...	..	.722	..	..	.90	..
29th, ...	.849	.725	.124	.95	.85	.10
30th, ...	.852	.741	.111	.97	.85	.12
May,						
1st, ...	.866	.768	.098	.98	.88	.10
2nd, ...	.879	.730	.149	.98	.85	.13
3rd, ...	.826	.700	.126	.92	.82	.10
4th, ...	.817	.712	.105	.90	.82	.08
5th, ...	..	.708	..	..	.82	..
6th, ...	.840	.708	.132	.90	.82	.08
7th, ...	.832	.734	.098	.92	.87	.05
8th, ...	.890	.767	.123	.98	.87	.11
9th, ...	.852	.713	.139	.92	.80	.12
10th, ...	.853	.730	.123	.92	.85	.07
11th, ...	.821	.686	.135	.90	.75	.15
12th, ...	..	.747	..	..	.82	..
13th, ...	.814	.672	.142	.89	.81	.08
14th, ...	.794	.667	.127	.88	.77	.11
15th, ...	.814	.677	.137	.89	.78	.11
16th, ...	.807	.702	.105	.90	.80	.10
17th, ...	.833	.728	.105	.94	.81	.13
18th, ...	.853	.740	.113	.92	.81	.11
19th, ...	..	.784	..	..	.88	..
20th, ...	.890	.752	.138	.96	.87	.09
21st, ...	.852	.715	.137	.92	.83	.10
22nd, ...	.822	.706	.116	.90	.80	.10
23rd, ...	.820	.691	.129	.90	.80	.10
24th, ...	.816	.669	.147	.90	.78	.12
25th, ...	.798	.654	.144	.88	.74	.14

Month.	Barometer.		Range.	Aneroid.		Range.
	Max.	Min.		Max.	Min.	
May,						
26th, ...	29.783	29.659	.124	29.87	29.78	.09
27th, ...	.758	.678	.080	.85	.78	.07
28th, ...	.764	.673	.091	.85	.79	.06
29th, ...	..	.642	..	..	.72	..
30th, ...	.771	.669	.102	.88	.77	.11
31st, ...	.807	.692	.115	.90	.80	.10
June,						
1st, ...	.813	.650	.163	.90	.83	.07
2nd, ...	..	.682	..	..	.82	..
3rd, ...	.755	.650	.105	.84	.80	.04
4th, ...	.746	.649	.097	.84	.78	.06
5th, ...	.710	.610	.100	.83	.76	.07
6th, ...	.670	.560	.110	.80	.70	.10
7th, ...	.681	.582	.099	.81	.71	.10
8th, ...	.606	.586	.028	.82	.72	.10
9th, ...	.658	.569	.089	.78	.74	.04
24th, ...	.680	.601	.079	.78	.74	.04
25th, ...	.685	.596	.089	.79	.75	.04
26th, ...	.706	.607	.099	.78	.75	.03
27th, ...	.675	.595	.080	.78	.72	.06
28th, ...	.701	.619	.082	.80	.75	.05
29th, ...	.710	.646	.064	.80	.78	.02
30th, ...	..	.611	..	..	.73	..
July,						
1st, ...	.682	.617	.065	.78	.75	.03
2nd, ...	.765	.644	.121	.80	.77	.03
3rd, ...	.801	.737	.064	.80	.77	.03
4th, ...	.804	.720	.084	.81	.80	.01
5th, ...	.768	.698	.070	.80	.80	.00
6th, ...	.757	.697	.060	.80	.80	.00
7th, ...	..	.642	..	..	.75	..
8th, ...	.704	.632	.072	.78	.75	.03
9th, ...	.696	.622	.074	.78	.76	.02
10th, ...	.703	.602	.101	.78	.75	.03
11th, ...	.687	.616	.071	.77	.75	.02
12th, ...	.666	.579	.087	.77	.74	.03
13th, ...	.629	.569	.060	.75	.72	.03
14th, ...	..	.576	..	..	.73	..

Month.	Barometer.		Range.	Aneroid.		Range.
	Max.	Min.		Max.	Min.	
July,						
15th, ...	29.646	29.574	.072	29.77	29.72	.05
16th, ...	.582	.488	.094	.72	.64	.08
17th, ...	.581	.505	.076	.71	.66	.05
18th, ...	.597	.499	.098	.72	.66	.06
19th, ...	.669	.559	.110	.77	.70	.07
20th, ...	.680	.612	.068	.78	.76	.02
21st, ...	..	.590	..	..	.74	..
22nd, ...	.667	.580	.087	.76	.74	.02
23rd, ...	.592	.505	.087	.72	.66	.06
24th, ...	.552	.485	.067	.70	.66	.04
25th, ...	.579	.487	.092	.72	.64	.08
26th, ...	.585	.526	.059	.72	.69	.03
27th, ...	.587	.530	.057	.73	.70	.03
28th, ...	..	.690	..	..	.79	..
29th, ...	.775	.690	.085	.80	.79	.01
30th, ...	.791	.727	.064	.80	.80	.00
31st, ...	.792	.728	.064	.82	.79	.03
August,						
1st, ...	.782	.706	.076	.84	.80	.04
2nd, ...	.770	.700	.070	.82	.80	.02
3rd, ...	.720	.655	.065	.80	.76	.04
4th, ...	..	.648	..	..	.74	..
5th, ...	.712	.632	.080	.78	.75	.03
6th, ...	.733	.636	.097	.79	.75	.04
7th, ...	.760	.666	.094	.80	.78	.02
8th, ...	.742	.642	.100	.80	.76	.04
9th, ...	.768	.661	.107	.83	.79	.04
10th, ...	.779	.685	.094	.84	.79	.05
11th, ...	..	.704	..	..	.80	..
12th, ...	.774	.707	.067	.84	.80	.04
13th, ...	.793	.719	.074	.84	.81	.03
14th, ...	.774	.698	.076	.83	.80	.03
15th, ...	.807	.712	.095	.86	.81	.05
16th, ...	.808	.713	.095	.86	.81	.05
17th, ...	.798	.719	.079	.86	.80	.06
18th, ...	..	.722	..	..	.81	..
19th, ...	.826	.715	.111	.85	.80	.05
20th, ...	.758	.668	.090	.81	.78	.03
21st, ...	.756	.666	.090	.86	.78	.08
22nd, ...	.807	.701	.106	.83	.79	.04

Month.	Barometer.		Range.	Aneroid.		Range.
	Max.	Min.		Max.	Min.	
August,						
23rd, ...	29.845	29.737	.108	29.87	29.80	.07
24th, ...	.806	.718	.088	.83	.80	.03
25th, ...	..	.650	..	..	.76	..
26th, ...	.761	.647	.114	.81	.78	.03
27th, ...	.804	.693	.111	.83	.79	.04
28th, ...	.826	.786	.040	.84	.81	.03
29th, ...	.809	.727	.082	.84	.80	.04
30th, ...	.786	.703	.083	.83	.79	.04
31st, ...	.819	.722	.097	.85	.80	.05
September,						
1st, ...	.844	.744	.100	.86	.81	.05
2nd, ...	..	.684	..	..	.78	..
3rd, ...	.778	.674	.104	.81	.78	.03
4th, ...	.837	.710	.127	.85	.80	.05
5th, ...	.868	.760	.108	.87	.82	.05
6th, ...	.855	.760	.095	.86	.82	.04
7th, ...	.777	.662	.115	.81	.79	.02
8th, ...	..	.633	..	..	.79	..
9th, ...	.759	.663	.096	.85	.79	.06
10th, ...	.780	.694	.086	.86	.81	.05
11th, ...	.826	.730	.096	.89	.82	.07
12th, ...	.819	.730	.089	.90	.83	.07
13th, ...	.788	.699	.089	.87	.82	.05
14th, ...	.805	.719	.086	.87	.81	.06
15th, ...	..	.816	..	..	.88	..
16th, ...	.931	.811	.120	.94	.88	.06
17th, ...	..	..	..	.94	.88	.06
18th, ...	..	..	..	.88	.83	.05
19th, ...	.822	.730	.092	.89	.82	.07
20th, ...	.871	.764	.107	.90	.84	.06
21st, ...	.871	.772	.099	.90	.87	.03
22nd, ...	..	.735	..	..	.82	..
23rd, ...	.825	.722	.103	.89	.82	.07
24th, ...	.853	.746	.107	.90	.85	.05
25th, ...	.865	.746	.119	.91	.86	.05
26th, ...	.873	.747	.126	.91	.86	.05
27th, ...	.891	.762	.129	.91	.88	.03
28th, ...	.892	.772	.120	.92	.88	.04
29th, ...	..	.776	..	..	.87	..
30th, ...	.891	.777	.114	.91	.88	.03

Month.	Barometer.		Range.	Aneroid.		Range.
	Max.	Min.		Max.	Min.	
October,						
1st, ...	29.891	29.763	.128	29.91	29.86	.05
2nd, ...	.891	.777	.114	.91	.85	.06
3rd, ...	.856	.731	.125	.90	.85	.05
4th, ...	.860	.740	.120	.89	.85	.04
5th, ...	.889	.772	.117	.90	.86	.04
6th, ...	..	.767	..	..	.86	..
7th, ...	.860	.742	.118	.90	.84	.06
8th, ...	.863	.742	.121	.90	.82	.08
9th, ...	.847	.736	.111	.88	.80	.08
10th, ...	.855	.751	.104	.87	.80	.07
11th, ...	.857	.754	.103	.88	.80	.08
12th, ...	.892	.771	.121	.90	.84	.06
13th, ...	..	.764	..	..	.84	..
14th, ...	.847	.712	.135	.85	.80	.05
15th, ...	.840	.708	.132	.88	.80	.08
16th, ...	.773	.662	.111	.84	.78	.06
17th, ...	.771	.667	.104	.82	.76	.06
18th, ...	.824	.696	.128	.86	.77	.09
19th, ...	.874	.751	.123	.89	.80	.09
20th, ...	..	.755	..	..	.80	..
21st, ...	.859	.730	.129	.88	.80	.08
22nd, ...	.838	.697	.141	.88	.79	.09
23rd, ...	.804	.692	.112	.84	.78	.06
24th, ...	.772	.653	.119	.81	.77	.04
25th, ...	.787	.687	.100	.83	.75	.08
26th, ...	.807	.695	.112	.82	.79	.03
27th, ...	..	.757	..	..	.83	..
28th, ...	.855	.727	.128	.89	.80	.09
29th, ...	.862	.752	.110	.89	.81	.08
30th, ...	.874	.779	.095	.89	.81	.08
31st, ...	.913	.804	.109	.91	.81	.10
November,						
1st, ...	.903	.760	.143	.90	.80	.10
2nd, ...	.894	.774	.120	.88	.83	.05
3rd, ...	..	.785	..	..	.80	..
4th, ...	.908	.770	.138	.88	.82	.06
5th, ...	.877	.751	.126	.90	.82	.08
6th, ...	.897	.764	.133	.89	.82	.07
7th, ...	.938	.817	.121	.90	.87	.03

Month.	Barometer.		Range.	Aneroid.		Range.
	Max.	Min.		Max.	Min.	
November,						
8th, ...	29.957	29.806	.151	29.91	29.88	.03
9th, ...	.933	.766	.161	.91	.89	.02
10th, ...	..	.738	..	..	.82	..
11th, ...	.836	.697	.139	.87	.81	.06
12th, ...	.800	.664	.136	.86	.80	.06
13th, ...	.860	.738	.122	.89	.82	.07
14th, ...	.952	.820	.132	.89	.82	.07
15th, ...	.963	.831	.132	.93	.89	.04
16th, ...	.971	.831	.140	.94	.90	.04
17th, ...	..	.871	..	..	.91	..
18th, ...	.996	.842	.154	.95	.90	.05
19th, ...	.982	.839	.143	.95	.88	.07
20th, ...	.975	.864	.111	.85	.83	.02
21st, ...	30.037	.920	.117	.85	.83	.02
22nd, ...	.074	.946	.128	.85	.83	.02
23rd, ...	.051	.897	.154	.84	.83	.01
24th, ...	..	.908	..	..	.81	..
25th, ...	.047	.919	.128	.83	.80	.03
26th, ...	.050	.898	.152	.85	.80	.05
27th, ...	.008	.893	.115	.82	.80	.02
28th, ...	.034	.891	.143	.82	.80	.02
29th, ...	.042	.893	.149	.82	.80	.02
30th, ...	.026	.891	.135	.81	.79	.02
December,						
1st, ...	.035	.885	.150	.81	.80	.01
2nd, ...	..	.876	..	..	.80	..
3rd, ...	29.939	.821	.118	.81	.79	.02
4th, ...	.967	.853	.114	.80	.79	.01
5th, ...	30.001	.908	.093	.80	.80	.00
6th, ...	.013	.891	.122	.80	.80	.00
7th, ...	29.996	..	..	.80	..	..
8th, ...	..	.837	..	..	.78	..
9th, ...	.998	.860	.138	.81	.81	.00
10th, ...	30.000	.876	.124	.80	.80	.00
11th, ...	.028	.900	.128	.81	.79	.02
12th, ...	29.998	.878	.120	.80	.79	.01
13th, ...	30.009	.896	.113	.80	.79	.01
14th, ...	.048	..	..	.82	..	..
15th, ...	..	.932	..	..	.81	..

Month.	Barometer.		Range.	Aneroid.		Range.
	Max.	Min.		Max.	Min.	
December,						
16th, ...	30.069	29.934	.135	29.83	29.82	.01
17th, ...	.067	.931	.136	.84	.82	.02
18th, ...	.025	.912	.113	.83	.80	.03
19th, ...	.046	.933	.113	.84	.80	.04
20th, ...	.064	.923	.141	.85	.83	.02
21st, ...	.058	..	..	.85	..	..
22nd, ...	..	.951	..	..	.82	..
23rd, ...	.061	.924	.137	.85	.81	.04
24th, ...	.021	..	..	.84	..	..
25th, ...	..	.880	..	..	.80	..
26th, ...	.018	.914	.104	.84	.80	.04
27th, ...	.003	.889	.114	.86	.81	.05
28th, ...	.041	..	..	.85	..	..
29th, ...	..	.914	..	..	.82	..
30th, ...	.051	.917	.134	.87	.81	.06
31st, ...	29.985	.852	.133	.84	.80	.04

The following observations have been sent to me by Capt. Thuillier, Deputy Surveyor General of India.

Comparison of an Aneroid Barometer, No. 3064, by Dent, with the standard in the Observatory at Calcutta.

Days.	Time of Observation.	Standard Bar.	Attached Ther.	No. 3064 An. Bar.	Difference of Bar.
March 23	Sunset	30.070	88.8	30.066	.004
„ 24	Sunrise	.096	69.3	.087	.009
	9 h. 50 m.	.206	89.2	.200	.006
	Noon	.184	93.7	.175	.009
	2 h. 40 m.	.110	95.7	.104	.006
	4 P. M.	.096	96.2	.087	.009
	Sunset	.080	90.2	.066	.014
„ 25	Sunrise	.100	72.0	.092	.008
	9 h. 50 m.	.198	84.5	.187	.011
	Noon	.178	91.3	.172	.006
	2 h. 40 m.	.108	94.3	.100	.008
	4 P. M.	.082	95.2	.079	.003
	Sunset	.066	90.0	.062	.004
„ 26	Sunrise	.088	71.8	.087	.001
	9 h. 50 m.	.184	85.3	.183	.001
	Noon.	.166	92.7	.166	.000
	2 h. 40 m.	.098	97.0	.100 *	.002
	4 P. M.	.084	97.3	.085 *	.001

The following observations were made at Poona in July and August.

The Standard Barometers employed were Nos. 1 and 2, the finest sent out by Mr. Adie, the way they kept together was quite admirable. The Mountain Sympiesometer referred to was a very elegant instrument procured for Col. Campbell, whose indications were also very accurate, and in most perfect harmony with those of the other instruments.

On comparing the instruments at Sewree, about 70 feet above the level of the sea, they stood on the 22nd July at 10 A. M. as under, the Thermometer being 84°, the correction for temperature of the Barometer here applied .149—the Standard at the Observatory at this date was 29.667, the instrument being 32 feet above the level of the sea.

Barometers.		Mountain Sympiesometer.	Aneroids.		
I.	II.		5821	5822	2244
29.676	29.662	29.750	29.765	29.790	29.780

The following were the readings of the instruments respectively at Poona at 10 A. M. on the 27th—the Observatory Standard had betwixt these two dates sunk from 29.667 to 29.587 or by 00.080 :—

Temperature at Poona 76°—Barometer corrected

I.	II.	Symp.	Aneroid.	Aneroid.	Aneroid.
27.713	27.713	27.830	27.800	27.802	27.650

Difference betwixt Poona and Bombay.

1.963	1.949	1.920	1.965	1.988	2.130

The coincidences here betwixt the barometer and mountain sympiesometers, and Mr. Treacher's Aneroids, are as close as may be.

These experiments were performed at Col. Grant's at the extreme end of the Artillery lines, his house is pretty nearly on a level with the church, the top of the spire of which is set down in the Trigonometrical Survey at 2038 feet above the level of the sea. Mr. Treacher's instruments were only cut to 27.5 inches, and that belonging to the Society cut to 23 was unserviceable. I took our own Aneroid to the top of Bap-dieu Ghat along with me—the following were the results; but as already stated the instrument was unserviceable, so that no conclusion from its indications, can in this case be drawn—the perfection of the Mountain Sympiesometer is very remarkable :

Bap-dieu Ghat, August 23rd.

	Barometer I.	Symp.	Ther.
Poona, 7 A. M.....	27.952	28.05	76
Bap-dieu Ghat, 9 A. M.	26.747	26.85	74
	1.205	1.20	

The Barometer is corrected for temperature to 32°.

The Barometer at the Colaba Observatory stood on the 23rd August at 29.845 or 1.893 higher than that at Poonah: if to this be added .030 for the difference betwixt 7 A. M. at which the upper instrument and 10 A. M. at which the lower one was read, we shall have a difference of 1.923, or adding 3 for difference of elevation betwixt the Colaba and Sewree Standard, almost exactly the same as that originally set down as the result of the first comparison. At Poona the range betwixt the 26th, and 31st July was about .040, that at Bombay about .070, that for the latter part of August at Bombay about .090: I have no note of the Poona range of this date, but assume it at 6, and have taken the half.

While in Poona I took with me three Aneroids with a Sympiesometer into the carriage, and drove over the station to see with what facility the instruments could be employed in flying surveys. I did this repeatedly. On one occasion I was accompanied by Col. Grant: on another by Captain Stoddart: it is needless to give details—compared with the barometer the coincidences were of course always wonderful: on one occasion we took a series of levelled stations, where the accuracy was surprizing. The great recommendation, both in their case and that of the Sympiesometer, was the facility with which they could be observed: by pulling up the horses for a couple of minutes the scale could be read and marked at once, and one hundredth of an inch being allowed for ten feet of change of level, which it is at this elevation pretty nearly, no reductions of any sort were requisite—these could be performed at home afterwards.

The following paper is by Professor Patton—it gives the merits of the experiments, with the Aneroid up to 4500 feet: it has been published in the *Bombay Times* and no where else that I am aware of.

"Considerable discussion has of late arisen on the subject of the Aneroid Barometer, and great uncertainty still exists in reference to

its utility. A letter from the eminent instrument-maker, Mr. Adie, read before a late meeting of the Society, has tended very much to increase previously existing doubts of its usefulness in ascertaining high altitudes, for which its portability and cheapness would have made it particularly suitable. This Society also having ordered a supply from England, it is of great importance not only to have those doubts set at rest, but also to have some means of testing their correctness in order to inform purchasers of the limits within which they can be trusted. In order to do so, I obtained two Aneroids, one belonging to Mr. Treacher, graduated to 27.5 inches, and one belonging to the Society, graduated to 23 inches, and subjected them to the following experiment. In the neck of a flask containing a small quantity of mercury, I inserted a small bent tube, and when the flask was inverted, the mercury of course stood at the same level in the flask and in the tube.

"The flask was properly supported on a small retort stand, and the Aneroids were then placed under the receiver of an air-pump, and a few strokes given to the pump. When the air became a little rarified in the receiver, the elastic force of the air in the flask pressed down the mercury, and the degree of exhaustion was measured by the altitude to which the mercury rose in the tube. Therefore, neglecting for the present the diminution of the elastic force of the air in the flask arising from the increase of volume and neglecting also the temperature under the receiver, the *rise* of mercury in the tube should be exactly equal to the *fall* indicated by the Aneroid, and vice versa. And this was the case in each of the experiments, as will be seen from the readings given below. The air was first pumped out, and the receiver, not being perfectly air-tight, it re-entered gradually, and readings were taken at the same instant by myself and Mr. Ardaseer Framjee.

"Teacher's Aneroid.—No. 1.

Aneroid.	Height of Mercury in tube.
Inches.	Inches.
27 ·5	2.55
28 ·0	2.25
28 ·5	1·55
29 ·0	1.05
29 ·4	0·55
30·05	0.00

"Aneroid.—No. 2.

"1st Experiment.		2nd Experiment.	
Aneroid.	Height of Mercury in tube.	Aneroid.	Height of Mer. in tube.
Inches.	Inches.	Inches.	Inches.
26 .0	3 .9	24 .5	4 .75
26 .5	3.35	25 .0	4 .25
57 .0	2 .8	25 .5	3 .7
27 .5	2.35	26 .0	3 .2
28 .0	1.85	26 .5	2 .7
28 .5	1.35	27 .0	2 .2
29 .0	0.85	27 .5	1 .7
29.25	0 .6	28 .0	1 .2
		28.25	0.975
		28 .5	0 .7
		28.75	0.425
		29 .0	0 .2
		29 .7	0 .5

"From these experiments I felt satisfied that the Aneroid No. 2 would not differ from a mercurial barometer by more than one-tenth of an inch, if carried to a height of six thousand feet. Since these experiments were made, I have had an opportunity of taking it with me to Mahábaleshwar, and of comparing it with the Sympiesometer, and the results given below show how accurately my anticipations have been fulfilled,—at least as far as 4500 feet. Dr. Buist's observations at Poona had already proved its correctness to the height of 2000 feet.

	Aneroid.	Sympr.	Ther.	
October	19.—29. 8	29.56	90.0	12 o'clock noon—level of sea.
,,	19.—27.725	29. 5	83.5	3 Do. do. do.
,,	20.—29. 85	29.65	83.6	9½ A. M. Mhar River.
,,	20.—29.155	28.93	85 5	5½ P. M.
,.	20.—25. 79	25.54	68.5	9½ P. M. Monastery, Mahábaleshwar.

"The coincidence between the two instruments is seen to be very exact, the total fall of the Aneroid being 4.01, and of the Sympiesometer 4.02.

"The following are the readings of the Aneroid and Thermometer at different places between Mahábaleshwar and Poona.

	Aneroid	Ther.	
October	21.—25.756	65.0	9½ A. M. Monastery, Mahábaleshwar.
„	21.—25. 9	68.0	4 P. M. Top of Tai Ghaut.
„	21.—27.175	72.0	5 P. M. Bottom of do.
„	22.—27. 75	73.5	Top of Ghaut.
„	22.—27. 88	75.5	Bottom of do.
„	22.—26.725	81.0	Top of Ghaut near Poona, 6 P. M.
„	22.—27. 87	80.0	Poona lines. 10 P. M.
„	23.—27. 77	81.5	Do. do. 4½ P. M.
„	23.—27. 87	78.5	Do. do. 10 A. M.

"A very slight examination of these observations will show how sensibly the Aneroid is acted on by the smallest undulations of the ground, and that it acts as freely at 25 inches as at 30.

"They make no pretence to great accuracy, because most of them were taken when the palkee in which I was carried was in actual motion, but this only proves more strongly the value of the instrument for general purposes.

"When the merits of the Aneroid become known, and confidence is placed in its indications, it will probably supersede all other portable instruments for ascertaining the heights of mountains: I have therefore prepared the following table, which will enable any one who can multiply and divide, to obtain altitudes with all the accuracy that is required for practical purposes. The formula used in the calculation is given by Poisson in the second volume of his *Traite de Mechanique*:

$$Z = 18393.. \left(1 + \frac{2(t + t1)}{1000}\right) \text{Log.} \frac{h}{h1}$$

"Where t and t are the temperatures of the air in degrees of the centigrade thermometer at the two places of observation, h and h the length of the barometric columns, and Z the height in Metres.

"Table to facilitate calculations of heights of mountains.

32°	52416	47°	54163	62°	55911	77°	57658
33	52532	48	54280	63	56027	78	57774
34	52649	49	54396	64	56143	79	57890
35	52765	50	54512	65	56260	80	58007
36	52882	51	54629	66	56376	81	58124
37	52998	52	54745	67	56493	82	58240
38	53115	53	54862	68	56609	83	58356

39	53231	54	54979	69	56726	84	58472
40	53348	55	55095	70	56842	85	58589
41	53464	56	55211	71	56959	86	58706
42	53581	57	55328	72	57075	87	58823
43	53697	58	55444	73	57192	88	58939
44	53814	59	55561	74	57308	89	59055
45	53930	60	55677	75	57424	90	59172
46	54046	61	55794	76	57541	91	59288

"Rule.—Multiply the number in the table opposite to the mean of the temperatures of the two places in degrees of Fahrenheit, by the difference of the barometric heights, and divide by their sum. The quotient is the height in feet.

"Example.—On the 20th October, 1850, the barometer stood at 29.85 in the Mhar river near the sea, the thermometer indicating 83.5 ; and at the Monastery Mahábaleshwar it fell to 25.79, and the thermometer to 68.5. Required the height. Here the mean temperature is 76°, opposite to which in the table is found 57541, which being multiplied by 4.06, the difference, and divided by 55.64, the sum of the barometric heights, gives 4198 feet, the height required.

"Table of Heights found by the Aneroid.

Kenesore above the level of the sea, ...	feet 665
Monastery Mahábaleshwar, ...	feet 4198
Mount Charlotte above the Monastery, ...	feet 324
Mount Charlotte above the level of the sea, ...	feet 4527
Tai Ghaut,.....	feet 1362
Height of Ghaut above Poona,.....	feet 1216
Poona above the level of the sea,.....	feet 2025

"These heights, as far as I have been able to ascertain, coincide very nearly with the heights ascertained by other means. Indeed no single observation of the barometer at one of the places could be expected to give it more accurately.

"Leslie's rule is very convenient, and sufficiently accurate ; but the correction for the temperature of the air at the two places is often neglected in practice,—and even in some scientific works the fact of a correction being required is not mentioned. But this correction cannot be omitted, because in the case of Mahábaleshwar it amounts to upwards of 400 feet, and in the case of Poona to about 180 feet. The

results, however, are always too small, because in his investigation, he was only anxious to obtain an approximation, and neglected systematically all but round numbers, and all the omissions tended to reduce the apparent height. Near the equator the diminution of the force of gravity is another source of error, which still more diminishes the height deduced from the usual formula. I have therefore used, in the formation of the table given above, the number 52416, deduced from Poisson's formula, in preference to 52000 used by Leslie. Besides the thermometers in general use being graduated according to Fahrenheit's scale, it is inconvenient to be obliged to convert the degrees into those of the centigrade. As some persons may prefer the use of his rule, I add it, with the example given above worked out.

"Leslie's Rule.—As the sum of the mercurial columns is to their difference, so is the constant number 52000 feet to the approximate height. Correct the approximate elevation by shifting the decimal point three places back to the left, and multiply by twice the sum of the degrees of the detached centigrade thermometer; this product being now added, will give the true height.

"Taking the former example, we have—55.64 : 4.06 : 52000 : 3793, the approximate height and the correction is 3.798 ft. + 99.7 = 378, which gives for the true height, 4171, differing from the former by 27 feet.

"Of the more minute daily variations, and the corrections, if any, that are to be applied. I hope to be able to have some account for the next meeting of the Society.

"21*st November*, 1850. Joseph Patton."

It appears to me that at home the value of the Aneroid has been greatly underrated; and that it has been looked on notwithstanding all the noise that has been made about it, as little better than a house weather-glass fit enough to take the place of the wheel barometer, but fit for little more. Nothing certainly can be more ridiculous than the legends "set fair," "change," "rain," "much rain," "stormy," &c., with which the instruments have been marked when they are meant to be employed for survey purposes. In the Dekhan or wherever an elevation of 2000 feet is obtained, the Aneroid indicates throughout the year, a state of perpetual tempest. And not only does this tend to bewilder and mislead, but it occasions the loss of

much valuable space on the dial-plate of the instrument, which might be valuably occupied otherwise. The brass index or register may be expedient at home where the Aneroid is used as a weather-glass merely, by people too indolent or slovenly to write down their observations. Here it is an incumbrance constantly in the way, and liable to bring about the breaking of the glass, and ought, accordingly, to be discarded. The Aneroid, as used at home, is generally cut from 27.5 to 31 inches, so that at altitudes above 2500 feet it is useless. It ought to be graduated all round the scale, or at least as low as 23 inches; and in this case it would suit for the survey of the Neilgherries.

The Dial, as I shall call it, or Index-plate of the Aneroid, is about 4 inches in diameter, the scale is engraven about half an inch from the edge of the dial, and is by consequence 9 inches in circumference. When engraven all around it reads from 23 to 31 or over a space of 8 inches, each space corresponding to a barometric inch, being therefore in reality 1.125 inches, this is divided into tenths, each tenth being subdivided into quarters, so that the instrument reads to 0.025, it may be estimated to half this or 0.0125.

The space between the present scale and the extreme edge of the dial is half an inch in breadth all around, and is occupied by the words "stormy," "much rain," &c., calculated, as already stated, only to mislead us in India. Were these to be omitted and the thermometer which at present occupies the other margin of the dial-plate to be sunk, so as not to interfere with this scale or sweep of the index, a large portion of valuable space would be gained. The scale might now be cut half an inch further out so that one inch of the barometer would be represented by 1.5 instead of by 1.125 as at present. This may easily be subdivided into hundredth parts capable of being read to half this, or 0.005. Troughton's Marine Barometers when meant to be read without vernier are cut to hundredth parts of an inch, each division being a third less than those recommended for the Aneroid. As already stated, the brass index is a mere encumbrance endangering the glass and constantly in the way; and the steel index ought to be made very much finer than it is at present—as fine in fact as the second hand of a stop-watch. Reducing its dimensions besides improving the delicacy of the reading diminishes the mass and momen-

tum, and so rids us of the tremor and vibration to which it is liable when moved about.

The improvements suggested are all too obvious to require to be more than mentioned. They can be carried out without in any way increasing the expense, size, or complexity of the instrument, and ought to be insisted on by all those ordering Aneroids for survey purposes or for service of any sort in India.

Mr. Adie of Edinburgh states that below 28 inches he finds the Aneroid uncertain, and untrustworthy in its indications. Mr. Patton's experience is at variance with this; but should Mr. Adie's views prove correct, one set of instruments might be cut from 31 to 28; a second from 28 to 24, and so carrying down the series as far as might be considered desirable. The first set might serve for elevations under 3000 feet; the second commencing at 3000 might carry us to 6000 and so on. The instruments might easily be tested under the receiver of an air-pump without any actual ascent, the barometer guage with a good scale answering as well as the barometer itself.

The neatly-glued, leather-covered, velvet-lined box in which the Aneroid is enclosed is unsuited for India, a hot Dekhan wind will warp, twist and split it into pieces, a wet monsoon atmosphere liquify the glue, mould the cover and rot the lining. To meet the risks of climate and rough usage it ought to be provided with a strong case of copper, brass or zinc of nearly the form of the instrument. This should be stuffed with hair, with scraps of cork, India rubber, gutta percha, or fitted up with springs so as to diminish the risk of concussion or vibration. It should be then enclosed in strong leather like a powder flask or spyglass, with straps and buckles for convenient carriage.

Chronology of Makkah and the Hijáz before Mohammad chiefly founded upon Genealogy.—By Dr. A. Sprenger, *Secretary of the Asiatic Society.*

The following genealogical tables intended to illustrate the chronology of the chiefs of the *H*ijáz before Mohammad have been derived from the following authorities.

The genealogies of the Amelekites and Jorhomites have been taken from the Kitáb alaghány and Mas'údy the latter is also in Abú-lfedá but somewhat different and in Khoshaybary. The latter author differs from both these authorities: according to his statement Lahy لهي was the leader of the Jorhomite colony which settled in the Hijáz, and he was the son of Obayy b. Jorhom II. b. al-Ghawth b. Shaddád b. Sa'd b. Jorhom I. b. Qa*h*tan.

The genealogy of the mother of Qoçayy which appears to me very important and that of the Khozá'ahites from Abú Ghobsháu up to Lo*h*ayy have been taken from Wáqidy and the Tarykh Khamys.

I calculated three generations to one hundred years. This is somewhat too high in ordinary cases but it was the only means to bring the synchronisms into harmony. From Qoçayy to Mohammad I calculated the generations even higher than at thirty-three years each for reasons stated in the table. Mohammad is five generations from Qoçayy but Suwaybit a contemporary of Mohammad and some others were the seventh generation removed from him and *H*amzah who was of the same age as Mohammad only four. 'Abd al-Mo*tt*alib the grandfather of Mohammad married at the age of upwards of seventy a young woman and she gave birth to *H*amzah. This is therefore an exceptional case. Taking the average of all the genealogies of the descendants of Qoçayy, which we know, we find that six generations intervened between Qoçayy and Mohammad or about two hundred years. According to this calculation Qoçayy was born about A. D. 370.

Note.—Before the names of those men who were the chiefs of the Hijáz is an asterisk.

Born B. C.	*Genealogy of the Amelekites, of the Hijáz and of Zenobia.*	*Genealogy of the mother of Qoçayy.*	*Genealogy of the Jorhomites.*	*Genealogy of the Khozá'ahites.*	
		Azd.	Qahtán	Azd.	
		This is the name of a tribe and not of a person.	supposed to be the Joctan of Scriptures.	This is the name of a tribe and not of a person.	
333	.....	*Naçr.	Jorhom.		
300	.....	*Málik.	Name of the tribe and not of a person.		
266	.....	*'abd Allah.			
233	.....	*Ka'b.		Mázin	
200	.....	*al-*Hárith*.		the supposed father of several tribes.	
166	.....	*Ka'b.		Tha'labah Ghassány	
133	.....	*Zahrán.		the supposed father of the Ghassánnite tribe.	
100	Jondán or *Hamrán*.	*Nadhr.	Nabt or 'Abd Yalyl.		
66	Karkar.	*Dohmán.	Haná or Jorsham or Jorhom II.		
	This is the name of the tribe according to Mas'údy.				
33	Qatúrá.	*ça'b.	Al-Raqyb or 'Abd Madán.		
	This is the name of the tribe according to the Kitáb alaghány.	Sabus was the name of the king of the Hijáz at the time of Elius Gallus mentioned by Shrabo about 24 years B. C.			
A. D.					Born A. D.
1	Lawy.	*Mobshir.	Sa'd or Naghylah or Málik.	Amr Al-Qays Bitryq (i. e. Patricius.)	1
33	*Hawbar.	Yashkor.	'Amr or Zayd or 'Abd Masyh (i. e. Servant of Christ.)	*Hárithah Ghitryf*.	33
		His name occurs in the Tarykh Khamys but not in Wáqidy.			
66	*Samayda'.	Jotho'mah.	*Midhádh I.	'Amir Má-Alsamá.	66
	Being defeated by Midhádh I. he leaves Makkah and retires to Mesopotamia.	Father of an important family. He joined the tribe called al-Dyl b. 'abd Monáh b. Kinánah as confederate. It is said that he was a contemporary of 'amr Mozayqiyá.	First Jorhomite king of the *Hijáz*; expells the Amelekites from the *Hijáz*.		
			*Al-*Hárith*.		
			His grand-daughter was	'Amr Mozayqiyá.	100

		Flourished during the Jorhomite supremacy over the Hijáz according to the *Kitáb alaghány*. Married the daughter of the Jorhomite king al-*Hárith* b. Midhádh I. according to the Tárykh Khamys. Was the first who surrounded the Ka'bah with a wall.		According to some authors he defeated Midhádh II. and expelled the Jorhomites from the *Hijáz*. But according to others they were expelled by his grandson 'amr.	
166	TARIB.	GHANM. This name is in the Tárykh Khamys but not in Wáqidy.	*MIDHÁDH II. is expelled by the Azdites and retires to Syria. The Khozá'ahites who belonged to the Azdites are henceforth the ruling tribe of the *Hijáz*.	RABY'AH called LOHAYY. His ancestors are not known. Some say he was a son of Qama'ah, others give the genealogy which I give here and most authors do not give his genealogy at all. *T*'abary says that his wife Fohayrah, daughter of 'ámir was the grand-daughter of al *Hárith* b. Midhádh I.	166
200	'AMR. Slain by Jazymah the first king of Hyrah.	'AWF.	.....	*'AMR. Founder of the Khozá'ahite tribe and power. Is said to have changed the religion of the *Hijáz*.	200
233	AL-ZABBA. Sister of Zenobia slain by 'amr b. 'adyy the second king of *Hy*rah about A. D. 260.	*HAMÁLAH*.	.....	*KA'B, His sister Máwiyah was married to 'amr King of *Hyrah* who succeeded to the throne A. D. 268; and his daughter Hind was married to Amr al-Oays king of *Hyrah* who succeeded about A. D. 288. (*Hamzah* Isf. p. 100).	233
266	.....	KHAYR called SAYAL.	.....		266
300	.....	SA'D.	.....		300
333	.....	FÁTIMAH mother of Qoçayy to whom she gave birth about A. D. 375. She was then old.	.....	*SALÚL. *HOBSHIYYAH. *HOLAYL*. Father-in-law of Qoçayy, who had married his daughter Hobbá. *ABÚ GHOBSHÁN AL-MOHTARISH, Contemporary with Qoçayy to whom he sells the keys of the Ka'bah.	333

Chronology from Qoçayy to Mohammad founded on Genealogy.

	Probable date of birth. A. D.
*Qoçayy. The founder of Makkah. His genealogy is uncertain.	370
'Abd Monáf, Second son of Qoçayy; his elder brother 'abd al-dár was grown up when Qoçayy conquered the Ka'bah from the Khozá'ahites.	410
Háshim, Second son. Háshim was grey when he begat 'abd al-Mo*ttal*ib and died soon after his birth (Wáqidy.) But according to others (*Tár. Khamys*) he died at the age of 20 or 25 years. I have shown in my Life of Mohammad, page 30, that this is an error. The former account is confirmed by the fact that Háshim's rivals were Omayyah the son of his younger brother and 'ámir (b. Háshim b. 'abd Manáf b. 'abd al-dár) the grandson of his uncle. We may therefore suppose that he was upwards of 50 years old when he begat	442
'Abd al-Mottalib, Died in A. D. 579 at an age of 82 *lunar* years and was therefore born in A. D. 500. 'abd al-Mo*ttal*ib was 47 years old when he begat	500
'Abd Allah, Died in February, 571, before the birth of his son at an age of about 24 years.	546
Mohammad, Born in A. D. 571.	571

Literary Intelligence.

1. کھیت کرم A treatise on agriculture in Urdu compiled by order of the Lieutenant-Governor of the North Western Provinces, by Kalee Ray, Deputy Collector of Futtehgurh, 2nd edition, Delhi, 1849, 8vo. 54 pp. (lithographed). It treats on the different kinds of soil, the tools used in agriculture, on the modes of watering the fields, &c.; but the principal object of the book is to acquaint the agricultural population with the manner in which the revenue is collected and in which they can defend their rights. It is illustrated by coarse drawings and great attention is paid to the technical terms which are printed in the Nagree character as well as in the Persian, and carefully explained. I need not say that few of them are to be found in dictionaries and therefore this little volume is very useful.

2. فتح کذه نامه A statistical account of the zillah of Futtehgurh in Urdu by the same author, equally compiled by order of the Hon'ble J. Thomason, Delhi, 1849, large 8vo. 204 pp. lithographed. This is an admirable work, besides a most elaborate statistical report, it contains a historical account of every village in the district, genealogical tables of distinguished families, &c.

3. . آثارالصنادید A descriptive account of the antiquities of Delhi, in Urdu by Sayyid Ahmad, Moonsif of Delhi: Delhi, 1847, 8vo. lithographed. The book was undertaken at the suggestion of A. Sprenger. It contains a great number of lithographic drawings which though well drawn are very badly printed. Though it is not free from mistakes it may clear up many errors of even distinguished travellers and Geographers. Balbi identifies the iron lát in the ruined mosque at the Qo*t*b with Fyrozshah's lát or pillar, and he says that old Delhi extends as far as the Qo*t*b. Ritter is hardly more correct. He makes Diwan Kost of Diwáni Kháçç دیوان خاص and Yamuna Masjid of Jámi' Masjid مسجد جامع, i. e., the principal mosque or Jum'ah Masjid جمعه مسجد, i. e., Friday mosque. The natives give it the former name in writing and the latter in speaking, and the Europeans erroneously call it Jamnah Masjid, thinking that it is called so from the river Jamnah, but Yamuna Masjid I have never heard. He identifies Fyrozsháh's Kótlah which is close to the walls of Sháhjahánábád, or modern Delhi, with the Puráná Qal'ah which is two miles farther south. The former is on the northern and the latter on the southern extremity of the ruins of *old* Delhi, and from the gate of the one to that of the other you can still trace the chauk or corso of the ruined city. The Qo*t*b Minár has not its name from Qo*t*b aldyn Aybak as Ritter supposes but from the Saint Qo*t*b aldyn Baktyár Káky who is buried not far from it.

4. The Bostán of Sa'dy lithographed in Mo*h*ammad Mostafá Khán's press, Lucknow, A. H. 1265, 2nd edition of the same press. I mention this edition on account of the great care which has been bestowed in correcting the text and fixing the vowels of doubtful words. This edition has marginal notes some of which are useful. This is one of the few specimens of native criticism which has been awakened by the progress of printing among them. A learned man thinks it well worth his while to bestow his time on the edition of a correct text though he might not feel inclined to waste it in correcting a single manuscript,

and the competition of the Printers renders it necessary that they should publish good texts.

5. The Bostán of Sa'dy printed in types at Hooghly, A. H. 1264. Not much pain has been bestowed on this edition.

On the 30th July, died at Calcutta, Mowlawy 'Abdur Rahym, who is the author of several works, the method of which approaches to the European taste. His principal performance is the منتهى الارب فى لغات العرب Calcutta A. H. 1257, 4 vols. 4to. This is a translation of the Qámús made by Mohammad Habyb Allah who preserved the arrangement which is in the Arabic original and gave it the title of Qábús. Mowlawy 'Abdur Rahym has arranged the roots according to the first letter of the alphabet and he enumerates the derivatives of every root in systematic order, and made many other useful alterations and improvements. This book does not render the original text of the Qámús superfluous, but it contains a greater number of proper names than the original which renders it very useful for reference. Other works of the late Mowlawy are an Arabic grammar explained in Persian called غاية البيان Calcutta 1828, 4to. حل الشواهد Calcutta A. H. 1236, 8vo. 119 pp. This is chiefly derived from Razy's Commentary on the Sháfiah. It contains an explanation of the examples contained in the Sharh Mollá. The seven Mo'allaqats with an Arabic commentary, Calcutta 1823, 8vo. the commentary is chiefly derived from Zauzany. He may also be considered as the editor of a Persian Tazkirah called مرأة الخيال by Shyr Khán Lódy though it bears the name of his son Ahmad. It was compiled in A. H. 1102 and published in A. D. 1831.

A new edition of the Raghuvañsa with the commentary of Mallinátha will, we are informed, shortly issue from the Sanskrita Press of Calcutta. This press from its foundation has been very usefully employed in printing some of the standard works of the Bráhmanic literature, and among those already published we find the *Kumára Sambhava* and *Meghaduta* of Kálidása, the *Kádambari* of Bánabhatta, the *Sisupála-Badha* of Sri Harsa, the *Dasakumára charita* of Dandi, the *Anumána-chintámani* of Raghunátha Siromani, the *Tattvakaumudí* of Váchaspati Mis'ra, and the *Sábda-s'aktiprakás'iká* of Jagadís'a Tarkálañkára. The name of Professor Madanamohana Tarkálañkára on the title page is

a sufficient guarantee that the works are correctly printed, but we must observe that in Europe these editions will not be considered to have been "edited:" indeed they have no pretension whatever to be so called. None of them have any preface, and their readers are left entirely in the dark as to the authenticity of the MSS. from which they have been printed—the history of those MSS.—the names of those who wrote them—the age in which they appeared—the place whence they were procured—and every thing else connected with their literary fidelity and worth. We allude to this subject the more particularly as we find that no attention has been paid to note down the variants which are always met with in collating MSS., and the first chapter of one of the works, the Dasakumára, has been omitted without giving any reason for such omission. Professor Wilson, we know, has expressed some doubts regarding the authenticity of the chapter in question, but he has nevertheless retained it in his edition of the work, thinking it better that his readers should have the doubtful chapter, and with it an opportunity to judge for themselves, than be deprived of the introduction to a romance. In editing oriental classics, we wish that sufficient regard be shewn to obtain the use, and to point out the peculiarities, of good and ancient MSS., and that our Calcutta Schultenses and Erpeniuses may more carefully follow the footsteps of their European prototypes.

There is a strong current setting in, favourable to Bengali Literature, which augurs well as to the future prospects of Sanskrita lore, for the Sádhu Báshá or classical Bengali is so identified with the Sanskrita, that the students of the former are naturally disposed to cultivate the latter. We hear then with great pleasure that the principal of the Sanskrita College, Isvarachandra Vidyásagará is preparing a Sanskrita Grammar in Bengali, which will be adapted to late improvements in philological science, and is designed to smooth the path to this difficult language, but which has been made more intricate by the mystifications and scholasticisms of pandits. Along with this grammar a series of selections from Sanskrit writers will be given. We hope one day to see the Sanskrita College of Calcutta, a fount for a useful Vernacular Literature—and a model for an improved mode of learning Sanskrit.

A publicatiou presenting quite a novelty in Bengali Literature has lately made its appearance, the Satyárnab, a monthly Magazine of

twelve pages Quarto with two wood-cuts. The Journal is designed, like the Penny and Saturday Magazines in England to impart through the Vernacular tongue interesting and useful information, to combine the *utile cum dulci*. The work is printed at the Encyclopedia Press in Calcutta conducted by native Christians, and the price is only one rupee eight annas a year. Besides papers on practical religious subjects, the Magazine is designed to contain a series of articles on Natural History, Mohammadan history, biographies of eminent Englishmen in India, sketches of Hinduism, and Christian biography. The present number contains a very good article on Caste, which is to be continued.

A translation into Bengali of an excellent work, Chamber's Moral Class Book has just appeared; the style is good, and by the illustrative anecdotes it is well adapted for school and general reading. A Bengali Dictionary on the plan of Haughton's with all the meanings in Bengali is passing through the Purṇachandrodaya press, compiled by the Editor of the Purṇachandrodaya, who has rendered much benefit to his countrymen by the well executed useful works that have at various times issued from his press. Robinson Crusoe in Bengali, and the lives of Columbus and Peter the Great, will shortly be published under the auspices of the Vernacular Translation Society. We hope the same Society will also shortly issue under their patronage a Penny Magazine in Bengali. To the kindness of the Hon'ble J. D. Bethune and of Knight, the London Publisher, Bengali Vernacular Literature is deeply indebted for the valuable supply of type-metal cuts which have been furnished to illustrate Bengali publications.

We have received from Mr. F. E. Hall, of Benares, the following list of books lately published at that city.

List of works published by order of Government, North Western Provinces, for the use of the Benares College.

1. Elements of English Grammar, Sanskrit and English, ..		1847
2. Outlines of Sanskrit Grammar in Hindí, ...		1848
3. Vidyá Chakra, or Lectures on the relations of knowledge.	No. 1, English and Sanskrit,	1848
„	No. 2, „ „	1849
„	No. 3, „ „	1849
„	No. 4, „ „	1849

4. Laghu Kaumudí in Hindi, Part I,..... 1849
5. Tarka Sangraha. Text, Translation and Original Comment, 1849
6. Tattwa Samása, ditto ditto, ... 1850
7. Nyáya Sútra Vṛitti, Part I, ditto ditto,..... 1850
8. Reprints for the Pandits, No. I, containing Harris's Essay on Art, with Introduction,..... 1850
9. Reprints for the Pandits, No. II., containing Introduction to the Philosophy of Induction, following the order of Mr. J. S. Mill's System of Logic, Ratiocinative and Inductive, . 1851
10. Vedánta Sútra, Part I. Text, Translation and Original Comment, ... 1851
11. Kanáda Sútra, Part I, ditto ditto, ... 1851
12. Vedánta Sára, ditto ditto, ... 1851
13. Bháshá Parichcheda and Sidhánta Muktávalí, Part I, ditto, 1851
14. Laghu Kaumudí. Text and Translation with Elucidations and References, ... 1851
15. Algebra in Hiudí, Vol. I. By Bapú Deva, ... 1851

In Preparation.

1. Synopsis of Science, being an Encyclopædic View of Human knowledge, moulded on the Sútras of Gotama, English and Sanskrit.
2. Sanskrit First Lessons, on the Method of Ollendorf..
3. Yoga Sútra. Text, Translation and Original Comment.
4. Mímánsá Sútra, ditto ditto.
5. Anumána Khanda of the Chintámani.
6. Mahábháshya, with its Commentaries, the Kaiyyata and Vivaraṇa. Sanskrit text.
7. The Sequels to the Part I. of the Nyáya Sútra Vṛitti, &c. &c.

Works Published in Sanskrita.

संस्कृत पुस्तकानि ।

अमरकोश सटीक	शिवताण्डव
सारस्वत	गङ्गाऽष्टक
षटपञ्चाशिका	शिवस्तोत्र
लघ कौमुदी	मणिकर्णिकाऽष्टक
विष्णुसहस्रनाम श्वेत अक्षर	विश्वेश्वराऽष्टक

मेघदूत सटीक	अन्नपूर्णाऽष्टक
तर्कसङ्ग्रह सटीक	भैरवाऽष्टक
पाराशरी होरा	नित्यकर्म्म
महिम्न स्तोत्र	अष्टाध्यायी

In Press.

अमरकोश रामाश्रमी टीका सहित	रघुवंश सटीक

Works Published in Hindí.

भाषाकी पुस्तकें।

तुलसीकृत रामायण पं-बद्रीलालकी	गीतावली
तुलसीकृत रामायण-ढुंढीराज पर की	रोगान्तकसार
उपदेश दर्पण	श्याम सखेकी पदावली
वर्णमाला शिक्षा	शृंगारसङ्ग्रह
प्रश्नोत्तर मणि माला	कहानी की पुस्तक
विनयपत्रिका	चिट्ठियोंकी पुस्तक

PROCEEDINGS

OF THE

ASIATIC SOCIETY OF BENGAL

FOR APRIL, 1851.

The Society met on the 2nd instant at half-past 8 P. M.

The Hon'ble SIR JAMES COLVILE, President, in the Chair.

The proceedings of the meeting for the month of March were read and confirmed.

Bábu Jádavakrishṇa Siñha, duly proposed and seconded at the preceding meeting, was balloted for and elected an ordinary member.

The following gentlemen were named for ballot at the next meeting.

H. Woodrow, Esq. M. A.; proposed by the President and seconded by Mr. C. Beadon.

Joseph Fayrer, Esq. M. D.; proposed by Mr. Frith and seconded by the President.

Read letters—

1st. From Mauluvi Mohí-ud-din Ahmed, forwarding copies of the *Kholásat-ul-Hisáb* and *Tafsír Ahmadí*, for sale to the Society.

On the recommendation of Dr. Spreuger, it was determined that the last named work be purchased.

2nd. From E. A. Samuells, Esq., presenting on behalf of A. Spiers, Esq. C. S., the following coins to the Society.

3 Scotch coins of 1570—1582 and 1602.

1 of Sigismund III., king of Poland.

1 of the Free City of Hamburg, 1671.

1 of Charles the 1st (without date).

3rd. From Captain W. Sherwill, submitting a paper descriptive of a Colossal statue near Mandár in Rájmahál, and offering to the Society a History of the Rájmahál hills for publication in the Journal.

The paper was referred for publication, and the offer was thankfully received.

4th. From W. Seton Karr, Esq., Under Secretary to the Government of Bengal, forwarding a coloured map of the Midnapur district, for the Museum of Economic Geology.

5th. From Major M. Kittoe, Benares, regarding his archæological researches in Sárnáth, and requesting for the loan of the copper-plate grants in the Museum (one set at a time) for examination.

After some conversatiou on the subject it was agreed that Major Kittoe should be informed that the Society will gladly assist his researches with regard to the copper-plates in the way he desires; and will with pleasure receive any accounts he can from time to time afford of his progress in the archæological arrangements of ancient sculptures.

6th. From Captain Siddons, enclosing the 3rd chapter of his Translation of the Vichittra Nátak.

7th. From Dr. A. Campbell, Darjeling, presenting skins of the wild goat of Sikim, Himálaya, and a civet. "The (first named) animal" says Dr. C. "was killed at Younger, 14,000 feet, at the base of Kunchinjhingá, and the civet is sent merely to shew that the animal inhabits that part of the world unknown to our Zoologists."

8th. From Dr. A. Sprenger, enclosing a paper on the initial letters of the 19th Surah of the Qurân.

9th. From W. Earle, Esq., presenting three copper coins and a signét found seven or eight years ago, about 2 miles N. E. of Shahpur, Oondie, on ploughing up the ground, in the neighbourhood of which mounds and tumuli are seen.

10th. From Sir H. M. Elliot, Secretary to the Government of India, announcing that Dr. Andrew Fleming has been directed to furnish specimens of minerals from the Panjab for the Society's Museum.

11th. From Dr. E. Roer, submitting the subjoined extract from a letter from Dr. Goldstücker.

Extract from a letter from Dr. Goldstücker, dated London, 18th Jan. 1851.

"Dr. Müller has communicated to me, that the Asiatic Society has done me the favour to subscribe for 10 copies* of the works to be published by me. I owe my sincerest thanks to the Society, which I think, I cannot

* This is an error. The Asiatic Society has subscribed for 5 copies only.—E. R.

show in a more suitable manner than by informing you of the aim of my literary pursuits and the manner in which I hope to attain it. One of my chief objects, which since 1836, when I commenced my Indian studies, constantly engaged my attention, has been to trace the religious and philosophical development of the Hindus, and to lay the results of my researches before the public. Of the close connexion of religion and philosophy among the Hindus, I became aware only in the course of my studies, and the necessity of such a work, as I intend to publish, has forced itself the more upon me, as I find, that a separate treatment of the history of religion and philosophy would in most instances lead to hypotheses and doubtful results. The same difficulty obtained for both of them, viz., that the materials were either scanty or not yet accessible. When therefore the Vedas were published by competent scholars and translations of them promised, I resolved to commence a translation of the Mahábhárata, in order to obtain a uniform basis for quoting references for the more modern history of religion. For this purpose a revision of the often suspicious text of the Calcutta edition was necessary. I therefore compared the first books with the best appliances in Europe, and copied the commentaries of Nílakaṇṭha, Chaturbhuja, Arjuna Mis'ra, &c. for the whole Mahábhárata, in such a manner, that after another comparison with the MSS. at London, they are ready for the press. The first volume of my (German) translation which has been made with reference to those collations, is nearly completed. In respect to the collations I have to observe, that the various readings are considerable and of much more importance than I had reason to suspect, as the Calcutta edition is on the whole a careful one, and I am of opinion, that without these arduous and tedious preliminary labours, the translation could be but uncritical. I would take this opportunity to express a wish that the Pandits might be induced to lay before the public, the various readings which they collect in their editions. I do not think, that I myself shall be able to publish these philological researches and the commentaries as I am not supplied with the means for so great an undertaking.

"With reference to Indian philosophy, the want of the necessary appliances compelled me to publish the principal works of each period with their philological apparatus, before giving the result of my own critical and historical researches. I therefore intend, in accordance with the division of the orthodox philosophy into six principal schools, to publish the most important works of each division, which are not yet edited, and independent of the commentary, which I must add myself, to append to each division a history of its philosophy. How far I shall be able to follow out my plan, depends not only upon favourable external circumstances, but also upon the

sources which may be accessible to me in Europe, and upon the assistance of the learned in India in finding out the most important ancient works. I venture to hope, if the interest for this branch of the development of the Hindus is resuscitated in accordance to a systematical plan, that we shall in course of time receive from India those appliances the want of which we feel now so keenly.

" Permit me to mention more specially for what the first is wanted. I have of course to commence with the Mímánsá, of which the study the more requires renovation, as this commentary to the Vedas is closely connected with another, which my friends M. Müller and A. Weber are now publishing. I have commenced with the publication of the *Jaiminíya-nyáya-málávistara by Mádhava*, partly because, in want of other appliances I was compelled to begin with it, partly because I wholly concur in Colebrooke's opinion, that among all Mímánsá works this is the most simple and therefore best fitted for the commencement of its study. By the appliances I have met with at Paris, London and Oxford (there are none at Berlin) I trust, I shall be able to prepare a critical text. To this would be joined in the first volume the *Jaimini-sútras*, for which I have procured sufficient material. The next volumes of the Mímánsá division are to contain the extensive *Sábara-bháshya* and the important *Vartikas of Kumárila-svámin* For the former I have three MSS., but on account of their great extent, I do not yet exactly know whether they will be safe guides through the whole detail of my labours. *For the Vártikas, however, the prospect is yet very unsatisfactory*, as in Europe, viz. in London and Oxford, there are only two MSS., and both of them quite incomplete. An edition of this important work will therefore depend upon the success of my solicitations in various quarters for getting MSS., and I hope you will allow me also to request your mediation of procuring for me a MS. of the *Vartikas* of *Kumárila* (12 Adhyáyas of 4 Pádas each, with the exception of the 3rd, 6th and 10th Adhyáyas each of which contains 8 Pádas.) It would also be very important, if commentaries previous to Sábara could be discovered, especially the work, the author of which (in accordance with the designation of his disciples " Prábhákaras") must have had the name of *Prabhákara* :— also Guru. Jaimini's Sútras among others make a special mention of Bádari, but I have not been fortunate enough to trace a work of an author of this name, and I shall feel much obliged, if you can give me information about him. Is there any *Tantrika* work and a commentary to it by Bhavadeva in India? And may I take the liberty of asking another question, are there commentaries on Sábara's commentary, and which? In this case also is the Mímánsá literature in the East India House, ill-furnished; for it contains only a small fragment of such a commentary by *Sálikanátha*.

"The complete success of all these literary undertakings will of course depend upon the interest which learned institutions take in the publication of these works, as I can but little rely upon any assistance from booksellers.

"The publication of those works, the printing of which has not been commenced yet, will be interrupted for a time by a labour in which I have been lately engaged; for I have accepted of a proposal to prepare jointly with the venerable and revered Wilson a third edition of his Sanscrit dictionary. It is to contain an index to Pánini, all my philosophical and musical indices, and beside Wilson's materials, all that is available in the glossaries (Bopp, Johnson and Lassen, &c. &c.) and lastly, alterations in single points. To give more, is unfortunately not possible, as the book is for a long time out of print, and as it is first necessary, within two or three years to prepare a work, corresponding as much as possible to the present wants. The printing will commence after six or eight weeks.

"I conclude this long letter with a question, which I hope, you will not consider indiscreet, as it is a new request for the liberality of the Asiatic Society.

"Some of my friends have given me hopes, that the Asiatic Society would perhaps favour me with a copy of the Bibliotheca Indica, if I sent them in return a copy of the works which I am publishing. That this will be done on my part, I hope, I need not assure you, and I only add, that I should feel extremely indebted to the Society, if they could join my name to those who receive from the liberality of the Society those editions, so important and so rare in Europe."

The President gave notice of a motion for the next general meeting, that the council be authorised to expend, out of the Oriental Fund, a sum not exceeding Rs. 500, in getting such of the Persian, Arabic and Urdu MSS. as require to be newly bound, rebound, and also in getting such of them as require transcription, transcribed.

The President also read such of the new rules as had been amended in the course of the discussions at the special meetings, and on his proposal they were confirmed and ordered to be printed.

He also announced to the Society that one of their Members, Mr. B. H. Hodgson, has been elected a corresponding Member of the Academie des Inscriptions et belles lettres.

The Librarian and the Curator in the Geological Department having submitted their usual monthly reports the meeting adjourned.

Confirmed, May 7th, 1851.

J. Colvile.

Report of the Curator, Museum of Economic Geology.

GEOLOGY AND MINERALOGY.

Mr. J. Weaver has sent us a specimen of an Asbestiform Chlorite Schist from New Zealand. This rock is a soft Chlorite Schist which crumbles between the fingers but which on the fracture is decidedly fibrous, and in appearance might be taken for petrified wood.

From H. Torrens, Esq. C. S. we have received a small collection of 12 specimens of fossils and rocks from the Mootee Jhurna Falls, of which some will be additions to our cabinets. He has also sent us three baskets of coal from the same locality which I have referred to in the next section.

From Mr. Theobald, Junior, we have also a few select specimens of rocks of which some will add to our collections.

From Lt. Fell, I. N. commanding the H. C. Survey Brig Krishna, we have received a few specimens of calcareous rock and clay slate with imbedded shale and indurated lignite, with coal, from Diamond Island. These, though mere shore specimens, are of interest if they shew that the Arracan coal formations extend along the coast of Pegu towards Moulmein, though they may be mere detritus brought to this point by the varying currents, and washed up by the sea.

I have also put into the form of a paper for the Journal an account of a very interesting series of Calderite rocks, shewing the formation of this rock, as in the granites, by the gradual mixture and more perfect (apparent) semi-fusion of its constituent ingredients.

ECONOMIC GEOLOGY.

I have forwarded to Government, and have also put into the form of a paper for the Journal my detailed Report on the Deoghur copper ores and on the extraction of the silver from two of those which contain it by the beautiful Spanish amalgamation process. It is not therefore necessary farther to refer to them here than to say that I have completely demonstrated the practicability and efficiency of the process in India even at an unfavourable season of the year. I regret to add that we are even yet in spite of my best efforts deficient in supplies of ores from this very interesting locality !* Captain Sherwill having proceeded on duty, and Mr. Vincent from the

* It is worth noting here how remarkable an instance this is of the difficulties in collecting minerals in India. There are six classes of the ores containing silver and as yet I have been able to obtain only a scanty supply of two of them, sufficient to afford experiments of a pound weight only, when could I have obtained 20 or even 50 lbs. I would have worked that quantity ! Of the remaining four we have too little to attempt an amalgamation with them. We want on such an occasion a maund, and we obtain but an ounce or two of each sort ; not for want of zeal and good will, but simply from the difficulties of distance, roads, climate, jungle and the want of Europeans on the spot. And yet this is within 200 miles of Calcutta.

nature of his public duties being unwilling to meddle with the mine. I learn, however, that Mr. G. Barnes has obtained a pottah of the mine, and his brother, Mr. Charles Barnes, called at the Museum for information and advice, which I of course have given to the best of my ability; and I trust that before the rains some samples of the ores will be sent to England to ascertain their fair commercial value.

Captain Sherwill has also sent us from the bed of the Adji River not far from Deoghur, some new samples of copper ore, which are the common sulphuret of copper. He states these were found in the bed of a dry nullah by a gentleman of the survey service. At present we have no farther information of this locality, and this ore is the poorest kind of copper ore, but it is of importance that we should know as many of the localities in which copper exists as possible.

Captain Sherwill has also sent us from Afzulpoor a specimen of coal of which he says,—

"I send you a box of the coal and Pyrites from near Afzulpoor on the banks of the Adji Nullah, 16 miles north of the Ranigunge collieries; it is no new discovery but the specimens may be of interest to the Museum."

Specimen No. 1.	Red sandy soil, ...	3	feet.
,, No. 2.	Grey clay with minute veins of carbonate of lime,	2.	1.
,, No. 3.	A loose, incoherent carbonaceous stratum, ...	1.	1.
,, No. 4.	Bituminous shale, ...	6.	0.
,, No. 5.	Bituminous coal with Pyrites; the depth of the coal unknown, ...	13.	6.

(Signed) W. S. Sherwill.

27*th June*, 1850, *Berhampore*.

As this coal was of a brighter appearance than any Burdwan coal which I have seen, I have analysed it and the result is that it contains in 100 parts—

Gaseous matter,....	32.	25.
Carbon, ...	60.	15.
Grey ash, ...	7.	15.
Loss (Water?)		45.
	100.	00.

The pulverised coal cakes into a single puffy mass of fine coke, very porous and metallic in the fracture, and burning very slowly while reducing it to ash. The ash is of a whitish grey colour and contains minute granules of a white colour. It does not effervesce with Muriatic Acid and thus contains no Carbonate of lime. A lump of this coal burnt in a close crucible gave 71 per cent. of coke, and as this coke would contain the 7.15 of ash, 100 parts of the coke would thus contain 10.07 of ash—in round numbers 11

per cent. or 60 per cent. of pure coke. From its slow combustion it might not answer for steam purposes, but for smelting and other work it would no doubt suit. I find that this coal approaches within 1 per cent. of its constituents to the Chinakuri coal No. 6 analysed by Mr. James Prinsep in his table given at p. 197 of Vol. VII. of the Journal (1838) which gives 52 per cent. of pure coke, Newcastle coal giving 65 per cent. of coke.

Mr. Torrens' specimen of coal from the Mootee Jhurna Falls mentioned above was also examined.

It is a bright jet coal decomposing very rapidly in the air and separating into small parallelopipeds. It burns in the forceps with a steady glowing combustion leaving a white ash. It gives no visible smoke from the closed crucible but a sickly disagreeable smell.

The constituent parts are,

Water,*	18.	50.
Gaseous matter,.....	23.	75.
Carbon, ...	29.	30.
Ash,.....	28.	45.
	100.	00.

The ash is of a pale brown colour and like the foregoing contains minute little white granules. It also contains no lime as a carbonate.

We have also received from Major Jenkins two specimens of coal from Namsang Cahing and Barjan, in Assam. The last is labelled "Barjan Steam Coal" and some fine coke made from it has been sent down with it. From the pressure of other researches on hand, I have not been able yet to examine these specimens, but will do so on an early day. Major Jenkins has also forwarded a specimen of the supposed argentiferous lead ore from the Bhor Kamptee country, but upon examination it does not contain any appreciable quantity of silver. The following letters refer to this ore.

No. 118.

From the Under Secretary to the Government of Bengal,

To H. Piddington, *Esq. Curator of Economic Geology, dated Fort William, the 28th February,* 1851.

Sir,—The Agent to the Governor General, North East Frontier, having reported to Government that he has forwarded to you, by Dáwk banghy, a specimen of argentiferous lead found in Bor Kamptee in upper Assam, I am directed by the Deputy Governor of Bengal to request that you will submit

* By an independent experiment. It is probable that on being freshly mined it may not contain by a great deal so large a proportion of water the absorption of which, when it is exposed to the air, is probably the cause of its rapid decomposition which, with its large proportion of ash, wholly unfits it for a useful coal except on the spot.

a report of the result of any analysis of the ore in question which you may make, for the information of his Honor.

I have the honor to be, &c.

(Signed) W. Seton Karr,

Under Secretary to the Govt. of Bengal.

From H. Piddington, *Esq. Curator Museum Economic Geology.*

To W. Seton Karr, *Esq., Under Secretary to the Government of Bengal.*

Sir,—In reply to your letter No. 118 of the 28th ultimo, I have the honor to report that the specimen of lead ore forwarded by Major Jenkins contains no silver, or so minute a portion as not to be detected by examination of such small quantities, and certainly none to render it worth working. It contains 3 or 4 per cent. of Antimony.

2. I fear Major Jenkins has been imposed upon, for his specimen is nothing more than a rolled lump of common galena probably picked from some torrent, and certainly not one from any wrought vein or bed. From the dread which natives entertain of Europeans obtaining any knowledge of their mines you are doubtless, Sir, aware, that nothing is more common, especially with native chiefs of all ranks, than to give, purposely, worthless specimens analogous in appearance to those of any value; and their followers dare not act otherwise. A notable instance or two has occurred of this within my own knowledge, and particularly one with the late Major Ouseley, in which smelted copper was given as the produce, and a red iron ore which did not contain a particle of copper, as the ore from which it was obtained!

I have the honor to be, &c.

(Signed) H. Piddington,

Curator, Museum Economic Geology.

Calcutta, 11th March, 1851.

Messrs. Robinson and Balfour have sent to the Museum some specimens of Turquoises with the following letter.

No. 1671.

H. Piddington, Esq.

Dear Sir,—At the request of W. J. H. Money, Esq., C. S. we beg to send herewith a parcel brought by him from Captain Lindquist, P. and O. Company's Agent at Suez, containing Turquoises picked up on Mount Serebat.

Captain L. would be glad to be informed whether they are of any value.

Yours, &c.

(Signed) Robinson, Balfour & Co.

These gentlemen have been informed that the specimens sent are no farther of value than as indicating the probability of a vein of these stones,

which, if good, might be well worth working, since good specimens sell at high prices in eastern countries, where the stone is supposed to possess peculiar virtues and is therefore held in high estimation.

H. Piddington,
Curator, Museum Economic Geology.

Library.

The following books have been received into the Library during the month of March, 1851.

Presented.

A Synopsis of the characters of the carboniferous Limestone Fossils of Ireland. By Mr. Frederick M'Coy. Dublin, 1846, 4to. Presented by Richard Griffith, Esq.

A Synopsis of the Silurian Fossils of Ireland collected by R. Griffith, Esq.—By F. M'Coy, Esq. Dublin 1846, 4to.—By the same.

Astronomical observations made at the Observatory of Cambridge, by the Rev. James Challis. Vol. XVI. for the years 1844-5. Cambridge, 1850.—Presented by the Syndicate of the Cambridge Observatory.

Selections from the Records of the Bengal Government. No I. on the Poppy Cultivation and the Benares Opium Agency. By Dr. W. C. B. Eatwell. Calcutta, 1851. Pamphlet.—By the Government of Bengal.

Tattwabodhiní Patriká. No. 91.—By the Tattwabodhiní Sabha'.

Meteorological Register kept at the Surveyor General's Office, Calcutta, for the month of February, 1851.—By the Deputy Surveyor General.

Satyárṇaba, No. 9.—By the Rev. J. Long.

The Journal of the Indian Archipelago and Eastern Asia, for January, and February, 1851. Two copies each.—By the Government of Bengal.

List of Articles contributed from Bengal to the Great Exhibition of 1851.—By Dr. J. M'Clelland.

The Oriental Christian Spectator, February, 1851.—By the Editor.

The Calcutta Christian Observer, April, 1851.—By the Editors.

The Citizen, for March, 1851.—By the Editor.

Upadeshaka, No. 52.—By the Editor.

The Oriental Baptist, No. 52.—By the Editor.

The Purṇachandrodaya newspaper for March, 1851—By the Editor.

Exchanged.

Athenæum, Nos. 1208—12.

Purchased.

Layard's Nineveh, 2 vols. 8vo.

Humboldt's Cosmos. Translated by Otté, 2 vols.

Journal des Savants. Novembre, 1850.

The Annals and Magazine of Natural History, for December, 1850, and January, 1851.

The French in India.—By Lieut. Laurie.

Comptes Rendus, Nos. 22 to 25, for Dec. 1850.

Meteorological Register kept at the Surveyor General's Office, Calcutta, for the Month of April [illegible]

Date.	Observations made at Sun-rise.						Maximum Pressure observed at 9h. 50m.						Observations made at Apparent Noon.					
	Bar. red. to 32° F.	Temperature.			Wind.	Aspect of Sky.	Bar. red. to 32° F.	Temperature.			Wind.	Aspect of Sky.	Bar. red. to 32° F.	Temperature.			Wind.	Aspect of Sky.
		Of Mer.	Of Air.	W. Bulb.				Of Mer.	Of Air.	W. Bulb.				Of Mer.	Of Air.	W. Bulb.		
	Inches	°	°	°			Inches	°	°	°			Inches	°	°	°		
1	29.972	75.6	76.0	74.0	N. W.	Cloudy	30.011	81.6	83.1	76.8	W.	Cumulo-strati	29.998	86.6	88.4	77.2	W.N.W.	Cumulo-strati
2	.956	76.8	76.9	74.7	N. W.	Cumulo-strati	.012	83.2	86.1	76 2	S. S. W.	Clear	.977	89 0	90.7	74.9	S. W.	Clear
3	.892	76.8	76.8	75.2	S.	Clear	29.917	85.0	87.3	77 8	S. S. W.	Ditto	.873	91.0	92.9	77.6	S. W.	Cumuli
4	.793	77.6	77.5	75.5	S. S. W.	Ditto	.850	83.3	85.4	79.0	W.N.W.	Ditto	.796	90 2	92.4	77.9	S. W.	Clear
5	.745	80.0	80 3	78.3	S.	Cloudy	.800	85.4	88 0	80.7	S. W.	Ditto	.746	92.3	94.0	83.0	S.	Cumuli
6S.	.788	79.5	79 4	77.4	S.	Ditto	.838	86.0	88.2	79.7	S.W. sp.	Ditto	.817	91.2	92.8	82.5	S. sharp	Clear
7	.834	79.3	79.5	76 6	S.	Clear	.894	86.3	88.8	79.0	S. W.	Ditto	.862	91.3	92 4	81.4	S. S. W.	Ditto
8	.854	79.3	79.4	76.8	S.	Cloudy	.945	84.8	86.3	78.2	S. W.	Ditto	.910	90.6	91.2	80.3	S. W.	Cirro-strati
9	.866	79.8	80 0	77.8	S. S. W.	Cumuli	.917	86.3	88.4	77.3	W.N.W.	Cirro-strati	.882	92.4	94.4	77.2	S. W.	Ditto
10	.766	78.6	78.6	71.4	S.	Clear	.820	88.4	91 2	72.2	S. W.	Ditto	.761	95.6	97.4	77.0	S.	Ditto
11	.744	79.4	79.2	76.3	S. S. W.	Ditto	.794	86.7	89.2	78.2	S. W.	Clear	.746	94.6	96.5	78.0	S. E.	Clear
12	.673	81.2	81.7	79.9	S. S. W.	Cirro-strati	.742	87.7	90 2	79.8	S. W.	Ditto	.709	93.6	96.3	75.2	N. W.	Cirro-strati
13S.	.752	80.3	80.4	78.2	S.	Cirro-cumuli	.821	88 0	90.1	82.0	S.	Cumuli	.801	92.2	93.6	82.2	S.	Cumuli
14	.874	81.7	81 3	79.2	S.	Clear	.924	87.6	89.5	80 3	S.	Ditto	.886	92.4	94.3	82.0	S.	Ditto
15	.855	75.8	75.9	72.8	S. S. E.	Ditto	.904	86.2	88.9	81 0	S. S W.	Ditto	.855	91.3	93.3	81.4	S. S. W.	Clear
16	.800	77.3	76.5	70.6	W.N.W.	Cirro-strati	.863	84.4	87.6	74 7	N. E.	Cirro-strati	.847	91.0	93.3	75.2	S. S. W.	Ditto
17	.807	80.0	79.8	78 2	S. E.	Ditto	.844	87.0	88.7	80.8	S.	Cumulo-strati	.810	90 2	92.0	82.0	S. S. W.	Cumulo-strati
18	.787	73.2	73.4	71.3	S. W.	Clear	.852	84.0	86.7	79.6	S.	Ditto	.819	89 0	89.8	81.2	S.	Ditto
19	.819	75.3	75.3	71.3	W.	Cloudy	.865	81.4	82.0	76.5	S. W.	Cloudy	.848	85 4	87.6	80.7	S. W.	Cirro-strati
20S.	.805	75.3	75.0	70.8	S.	Ditto	.854	83.2	85.4	78.0	W.	Cirro-cumuli	.821	88 2	89.0	89.4	W.	Cirro-cumuli
21	.763	77.6	77.0	70.8	W.N.W.	Ditto	.788	82 1	84.8	75.4	S. W.	Clear	.747	88.4	90.2	78.8	W.	Cirro-strati
22	.669	78.7	78 6	77.0	S.	Clear	.737	85.9	88.0	81.2	S.	Cumuli	.687	90.7	92.0	83.8	S.	Cumuli
23	.672	72.2	72.6	71.3	S. W.	Ditto	.705	83.0	85.0	80.5	S.	Cumulo-strati	.646	88.2	89.5	82.3	S.	Cumulo-strati
24	.634	79.2	79.6	76.6	S. S. E.	Cloudy	.676	83.6	86.2	82 6	S.	Ditto	.642	88 0	90.0	83.8	S. S. E.	Ditto
25	.696	79.2	79.0	77.7	E.	Ditto	.732	84.2	85.7	82.2	N. E.	Cloudy	.692	88.7	90.6	84.4	E. N. E.	Ditto
26	.642	81.3	81.0	80.0	S.	Clear	.677	87.6	89.3	81.4	S.	Cumuli	.636	90.4	90.8	82.4	S.	Cumuli
27S.	.603	81.2	81.4	79.3	S.	Cumuli	.655	89.3	90.5	81.3	s.s.w. sp.	Ditto	.664	91.0	92 2	82.3	s.s.w. sp.	Cumulo-strati
28	.689	80.8	80.8	78.8	S.	Ditto	.745	87.5	88 8	81 8	S.	Ditto	.720	91.0	92.2	81.4	S. sharp.	Clear
29	.691	80.8	80.8	78 4	S.	Cirro-strati	.734	88 0	89 8	81.4	S.	Clear	.706	91.1	92.7	80.3	S.	Ditto
30	.605	81.8	81.9	79.2	S. S. W.	Cumuli	.649	88 4	89.6	80.7	S.	Cumuli	.629	92.3	93.4	81.5	S. W.	Ditto
Mean	29.768	78.5	78 5	75.9	....	.....	29.821	85.5	87.6	79 2	....	.....	29.784	90 6	92.2	80.2	....	.....

[*Meteorological Register, continued.*]

Observations made at 2hs. 40m.						Minimum Pressure observed at 4 p. m.						Observations made at Sun-set.						Maximum and Minimum Thermometer.				Rain Gauges.			
Bar. red. to 32° F.	Temperature. Of Mer.	Of Air.	W. Bulb.	Wind.	Aspect of Sky.	Bar. red. to 32° F.	Temperature. Of Mer.	Of Air.	W. Bulb.	Wind.	Aspect of Sky.	Bar. red. to 32° F.	Temperature. Of Mer.	Of Air.	W. Bulb.	Wind.	Aspect of Sky.	Max.	Mean.	Min.	Max. Therm. in Sun's rays.	Feet. 60. Upper.	Feet. 5. Lower.	Moon's Phases	Date.
Inches	°	°	°			Inches	°	°	°			Inches	°	°	°			°	°	°	°	Inch.	Inch.		
29.907	91.6	92.6	76.4	N. W.	Cumulo-strati	29.884	92.3	92.3	73.6	S. W.	Cumuli	29.893	88.0	87.5	73.8	S. E.	Clear	93.0	84.4	75.8	116.3	..	..		1
.848	92.4	92.4	75.0	w.s.w.	Ditto	.824	92.4	92.7	75.5	S.SW.	Cumulo-strati	.835	87.8	86.0	72.0	S.	Ditto	93.8	85.6	77.3	110.8	..	..	●	2
.781	95.0	96.2	71.3	W.	Cumuli	.747	95.7	96.3	71.7	WSW	Clear	.735	90 4	87.7	77.4	S S W.	Ditto	96.4	86.7	77.0	112.6	..	..		3
.717	95.3	96.6	73.7	w.s.w.	Ditto	.695	96.2	95.8	77.7	S.	Ditto	.695	92.0	90.0	80 0	S.SW.	Ditto	97.3	87.6	77.8	117.0	..	..		4
.667	95.3	95.3	81.0	S.	Cumulo-strati	.641	95.4	95.4	80.2	S.	Ditto	.674	90.8	89.0	81.3	S.	Ditto	96 5	88.7	80.9	114.6	..	..		5
.746	93.8	93.0	79.0	S. shp.	Clear	.734	93.0	92.2	80.2	S.	Ditto	.761	88 4	87.4	79.8	S.	Cirro-strati	95.0	87.4	79.7	109.8	..	..		6
.785	93.4	92.8	82.5	S.	Ditto	.775	92.2	91.4	80.5	S.	Ditto	.779	89.0	87.7	80.0	S.	Ditto	95.2	87.5	79.8	109.7	..	..		7
.833	92.6	94.4	78.8	S. W.	Cirro-strati	.819	93.4	94.0	73.0	S. W.	Cirro-strati	.833	91.0	90.2	72.8	N.	Cumuli	94.6	87.3	80.0	113.8	..	..		8
.785	96.3	97.0	76.6	W.	Ditto	.765	96.6	96.9	75.8	S. W.	Ditto	.758	92.8	90.0	70.2	S.SW.	Cirro-strati	97.7	87.9	78.0	115.5	..	..	☽	9
.691	97.5	97.4	81.2	S.	Ditto	.667	96.6	95.2	80.5	S.	Ditto	.664	91.0	89.4	77.3	S.SW.	Ditto	99.6	89.3	79.0	115.0	..	..		10
.679	97 4	98.6	75.4	E.	Clear	.662	98 0	98.3	75.3	S.	Clear	.651	94.5	93.0	82.4	S.SW.	Ditto	99.0	89.4	79.8	118.5	..	..		11
.638	97.4	99.3	74.0	N. W.	Cirro-strati	.611	98.3	99.4	73.4	S. W.	Cirro-strati	.609	94.4	92.6	74.4	S.	Ditto	99.2	90 5	81.8	121.3	..	..		12
.726	95 3	95.8	80.5	S.	Cumuli	.718	95 6	95.3	83.3	S.	Cumuli	.733	89.0	87.0	80.2	S. shp.	Cloudy to the S.	96.8	88.9	81.0	114.6	..	..		13
.810	94.2	94 0	81.2	S.	Ditto	.763	93.6	92.6	81.2	S.	Clear	.763	89.2	86.9	79.8	S.	Cloudy	95.8	88.8	81.7	113.0	..	..		14
.776	94 0	94.2	82 2	SS.W.	Ditto	.747	93.4	93.0	82 0	S.	Cumuli	.748	90.0	88.0	80.8	S.	Ditto	95.4	85.6	75.7	112.3	..	..		15
.758	94.2	95.0	77.0	S.	Clear	.737	93.6	92.6	77.0	S.SW.	Clear	.764	88.6	86 4	78.2	S.	Cirro-strati	95.5	86.3	77.0	112.4	..	..	⊙	16
.718	93.2	93.5	82.4	S.	Cumulo-strati	.673	93.0	92.2	80.8	S	Cumulo-strati	.674	87.6	86.0	79.2	S.	Cloudy	94.3	87.2	80.0	110.6	0.62	0 66		17
.734	90.7	90.4	80 5	S.	Cumuli	.723	90.4	90.2	80.3	S S W.	Cumuli	.749	87.5	86.8	79.6	S.S. E	Ditto	91.7	82.1	72.4	106.9	0.60	0.64		18
.782	89.4	88.2	82.0	S.	Cirro-cumuli	.761	89.6	89.4	82.5	S.S. E.	Ditto	.758	87.0	85.5	80.6	S.	Cirro-strati	91 4	82.8	74.2	109.7	1.04	1.10		19
.754	88.2	87.6	79.4	S.	Cloudy	.736	86.4	86.0	80.4	S.	Cloudy	.758	83.8	83.8	79.4	S.	Cloudy	90.2	81.6	73.0	101.0	..	..		20
.655	92.3	93.4	79.0	S S W	Cumuli	.609	93.0	93.2	81.2	S.	Cumulo-strati	.609	89.5	87.8	80.6	S.	Clear	94.3	85.9	77.5	115.8	..	..		21
.564	93.0	93.7	79.2	S. W.	Clear	.558	92.0	91.3	79 8	S.SW.	Cloudy	.687	76.8	73.7	72.2	ENE.	Raining	93.6	86.3	79.0	111.0	1.00	1.06		22
.576	90.6	91 6	85.0	S.	Cumulo-strati	.529	89.5	88.8	82.3	S.	Ditto	.567	85.0	84.8	80.3	S.	Cloudy	91.8	81.3	70.7	..	0.24	0.29	☾	23
.581	91.0	92.2	84.4	S.	Ditto	.564	91.3	91.0	84 4	S.	Cumulo-strati	.598	89.0	87.6	83.3	S. E.	Clear	92.7	84.4	76.0	109.8	..	..		24
.620	92.2	92.9	83.6	S.	Ditto	.595	92.5	92.0	83.4	S.	Ditto	.628	88.3	87.3	81.6	S.	Ditto	93.4	86.2	79.0	114.3	..	..		25
.575	92.6	93 2	83.4	S.	Cumuli	.550	92.0	91.0	82.1	S.	Cumuli	.562	88.8	87.3	80.7	S. E.	Cirro-strati	93.6	87.6	81.5	112.8	..	..		26
.601	92.3	92.7	83.4	SSE. sp.	Cumulo-strati	.586	91.8	91.2	82.3	S. shp.	Ditto	.626	88.8	87.4	81.3	S.	Cloudy	93.3	87.5	81.7	110.8	..	..		27
.648	94.0	94 2	82.5	S.	Clear	.601	93.0	92.5	80 3	S. shp.	Clear	.612	88.2	86.4	79,2	S.	Cirro-strati	94.8	88.1	81.4	112 8	..	..		28
.635	93.0	93 4	78.4	S. shp	Ditto	.597	93.2	92.8	78.8	S.	Ditto	.597	88.7	87.3	79.5	S.	Cloudy to W.	93.8	87.6	81.3	109.5	..	..		29
.579	94.4	94.3	82.1	S.	Cumuli	.547	93.7	93.3	81.8	S.	Cumuli	.563	89.7	87.9	79 3	S.	Ditto	95 4	88.8	82.2	109.7	..	..		30
29 706	93.4	93.9	79 7	....	.....	29.681	93 3	92 9	79.4	....	.....	29.696	88.9	87 3	78.5	....	.....	93.8	86.6	78.4	112.5	3.50	3.75		

For use in Library only